3-POLE

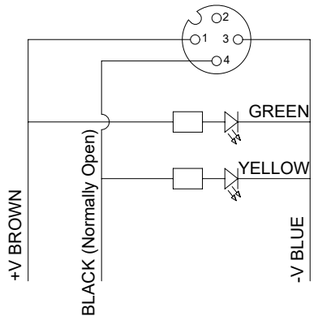

4-POLE

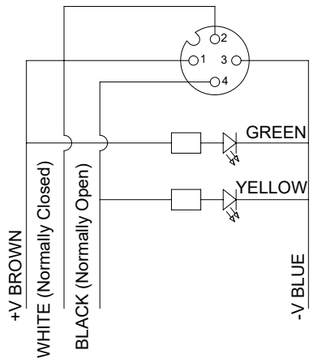

FEMALE FACE VIEW	FEMALE FACE VIEW
3-POLE	4-POLE
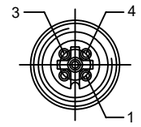	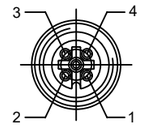
WIRING DIAGRAM	WIRING DIAGRAM
1 BROWN 2 NOT USED 3 BLUE 4 BLACK	1 BROWN 2 WHITE 3 BLUE 4 BLACK

PART No MATRIX

8	0	X	0	P	1	X	X	X	M	X	X	X	X

- 8=Micro Change
- 0= Portable Change
- 3=3 Core, 4=4 Core
- 0P1 = PNP female 90°
- CABLE TYPES
- M=Metres, F=Feet
- LENGTH: 020=2 METRES, 050=5 METRES, 200=20 METRES
- OPTIONS

COUPLING NUT
blank and 3-standard (BRASS)
1 - STAINLESS STEEL
5 - DELRIN
7 - TEFLON COAT
H=ID CARRIER

E02 = 0,25mm², PVC black
E03 = 0,34mm², PVC black
E13 = 0,75mm², PVC yellow
E52 = 0,34mm², PVC grey (RAL7001)
E57 = 0,34mm², PVC grey (RAL7001)
H09 = 0,34mm², PUR black
H69 = 0,2mm², PUR grey LSOH SCR
I02 = 0,25mm², PVC grey CEI
I03 = 0,34mm², PVC grey CEI
I20 = 0,34mm², PVC grey CEI SCR DC
I26 = 0,34mm², PVC grey CEI SCR AC
P02 = 0,25mm², PUR/PVC black
P03 = 0,34mm², PUR/PVC black
P08 = 0,25mm², PUR yellow HIFLEX
P20 = 0,34mm², PUR black LSOH braid
P82 = 0,34mm², PUR orange irradiated DC
S20 = 0,34mm², PVC yellow SJTO braid
S26 = 0,34mm², PVC yellow SJTO braid AC

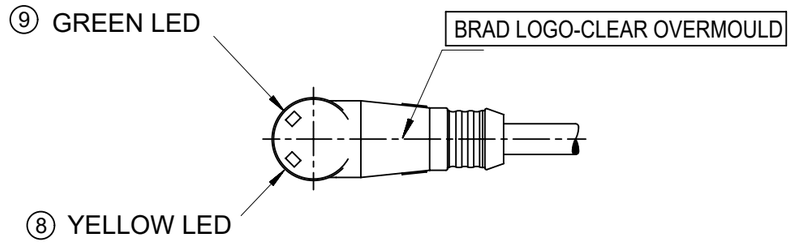

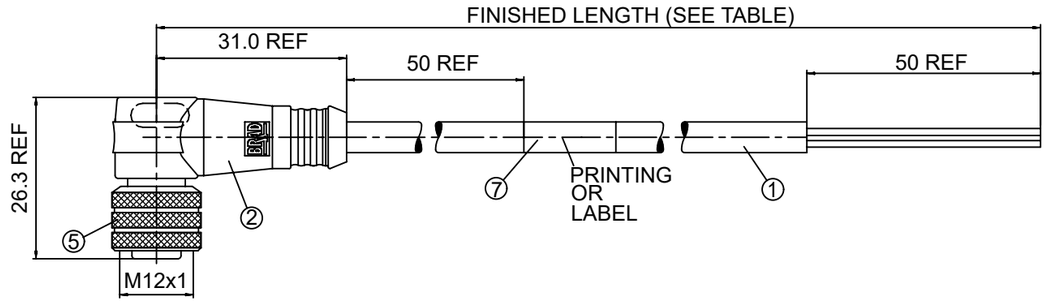

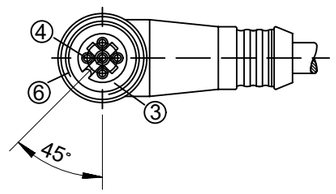

FRONT SIDE VIEW

Table of lenght tolerances		
Over	Up to and including	Tolerance (+)
0	305	+19
305	915	+45
915	1830	+56
1830	3660	+89
3660	7320	+165
7320	14640	+317
14640	30500	+610
30500	>	+2% of lenght

CONNECTOR SPECIFICATION:

VOLTAGE RATING	10 TO 30VDC
AMPERAGE RATING	max. 4 AMPS
PROTECTION	IP67
OPERATING TEMPERATURE	FLEXING: -5°C TO +90°C STATIC: -30°C TO +90°C

ITEM	COMPONENT	MATERIAL	FINISH
9	LED		GREEN
8	LED		YELLOW
7	LABEL	---	---
6	O-RING	VITON	RED
5	COUPLER	---	---
4	PIN CONTACT	COPPER ALLOY	---
3	INSERT	PUR	BLACK
2	OVERMOLD	PUR	NATURAL
1	CABLE	SEE TABLE	BLACK

DOCUMENT STATUS	P1	RELEASE DATE	2023/02/24 12:54:48

THIS DRAWING CONTAINS INFORMATION THAT IS PROPRIETARY TO MOLEX ELECTRONIC TECHNOLOGIES, LLC AND SHOULD NOT BE USED WITHOUT WRITTEN PERMISSION

DIMENSION UNITS	SCALE
mm	NTS

GENERAL TOLERANCES (UNLESS SPECIFIED)

	MM	INCH
4 PLACES	±	±
3 PLACES	±	±
2 PLACES	±	±
1 PLACE	±	±
0 PLACES	±	±
ANGULAR TOL	± 1.0 °	

DRAFT WHERE APPLICABLE MUST REMAIN WITHIN DIMENSIONS

CURRENT REV DESC: REMOVED OBSOLETED PART NUMBERS AS PER PCN#510806.

EC NO: 733771
DRWN: LIKITV 2023/01/12
CHK'D: GGA 2023/02/24
APPR: GGA 2023/02/24

INITIAL REVISION:
DRWN: HWALCZAK 2012/11/24
APPR: MIWASIECZKO 2013/01/15

FIRST ANGLE PROJECTION | DRAWING: A3-SIZE | SERIES: 120067

molex

CSE M12 PNP XP AC FE
RA XM SE

PRODUCT CUSTOMER DRAWING

DOCUMENT NUMBER	DOC TYPE	DOC PART	REVISION
SD-120067-035	PSD	001	B1

MATERIAL NUMBER	CUSTOMER	SHEET NUMBER
SEE TABLE	GENERAL MARKET	1 OF 2

FORMAT: Met-lega-master-tb-prod-A3
REVISION: E1
DATE: 2021/05/01

TABLE

1200675067	8030P1E03M020
1200675059	8030P1E03M030
1200675060	8030P1E03M050
1200678020	8030P1E03M0501
1200678326	8030P1E03M050H
1200675061	8030P1E03M100
1200678259	8030P1E03M150
1200678021	8030P1E03M2005
1200675027	8030P1E52M020
1200675025	8030P1E52M050
1200675026	8030P1E52M100
1200678308	8030P1H09M020
1200678310	8030P1H09M050
1200678006	8030P1H09M050H
1200678311	8030P1H09M100
1200678007	8030P1H09M100H
1200675009	8030P1I03M020
1200675093	8030P1I03M025
1200678144	8030P1I03M030
1200675010	8030P1I03M050
1200678210	8030P1I03M060
1200675011	8030P1I03M100
1200678145	8030P1I20M020
1200678026	8030P1I20M060
1200675068	8030P1I20M120
1200678029	8030P1P03M010
1200678030	8030P1P03M0101
1200675069	8030P1P03M020
1200678031	8030P1P03M0201
1200678032	8030P1P03M030
1200678147	8030P1P03M030H
1200675002	8030P1P03M050
1200675082	8030P1P03M050H
1200678197	8030P1P03M075

1200060366	8030P1P03M100
1200675083	8030P1P03M100H
1200678033	8030P1P03M150
1200678035	8030P1P09M050
1200678234	8030P1P09M100
1200678036	8030P1P09M150
1200675029	8030P1P82M020
1200675022	8030P1P82M050
1200678038	8030P1S20M010
1200678248	8030P1S20M0101
1200678039	8030P1S20M020
1200678040	8030P1S20M030
1200675012	8030P1S20M050
1200678192	8030P1S20M050H
1200678172	8030P1S20M1001
1200675013	8030P1S20M2001
1200678384	8040P1E02M100
1200678304	8040P1E03M010
1200675014	8040P1E03M020
1200675015	8040P1E03M030
1200678303	8040P1E03M040
1200060611	8040P1E03M050
1200675073	8040P1E03M100
1200678258	8040P1E03M150
1200678282	8040P1E03M200
1200678309	8040P1H09M020
1200678312	8040P1H09M050
1200678008	8040P1H09M050H
1200678313	8040P1H09M100
1200678009	8040P1H09M100H
1200678306	8040P1I03M010
1200678044	8040P1I03M020
1200678045	8040P1I03M030

1200678307	8040P1I03M040
1200670293	8040P1I03M050
1200670292	8040P1I03M100
1200658616	8040P1P03M010
1200060618	8040P1P03M020
1200651777	8040P1P03M030
1200658621	8040P1P03M040
1200678150	8040P1P03M050H
1200675017	8040P1P03M100
1200678151	8040P1P03M100H
1200678046	8040P1P03M150
1200678305	8040P1P82M0207
1200678010	8040P1S20M010
1200678201	8040P1S20M020
1200678051	8040P1S20M020H
1200675086	8040P1S20M030
1200675024	8040P1S20M040H
1200675018	8040P1S20M050
1200675023	8040P1S20M100
1200675019	8040P1S20M1001
1200678053	8040P1S20M100H
1200678265	8040P1S20M200
1200675074	8040P1S20M2001

THIS DRAWING CONTAINS INFORMATION THAT IS PROPRIETARY TO MOLEX ELECTRONIC TECHNOLOGIES, LLC AND SHOULD NOT BE USED WITHOUT WRITTEN PERMISSION

DIMENSION UNITS	SCALE
mm	NTS

GENERAL TOLERANCES (UNLESS SPECIFIED)

	MM	INCH
4 PLACES	±	±
3 PLACES	±	±
2 PLACES	±	±
1 PLACE	±	±
0 PLACES	±	±
ANGULAR TOL	± 1.0 °	

DRAFT WHERE APPLICABLE MUST REMAIN WITHIN DIMENSIONS

CURRENT REV DESC: REMOVED OBSOLETED PART NUMBERS AS PER PCN#510806.

EC NO: 733771
DRWN: LIKITV 2023/01/12
CHK'D: GGA 2023/02/24
APPR: GGA 2023/02/24

INITIAL REVISION:
DRWN: HWALCZAK 2012/11/24
APPR: MIWASIECZKO 2013/01/15

molex

CSE M12 PNP XP AC FE
RA XM SE

PRODUCT CUSTOMER DRAWING

DOCUMENT NUMBER	DOC TYPE	DOC PART	REVISION
SD-120067-035	PSD	001	B1

FIRST ANGLE PROJECTION	DRAWING	SERIES	MATERIAL NUMBER	CUSTOMER	SHEET NUMBER
	A3-SIZE	120067	SEE TABLE	GENERAL MARKET	2 OF 2

DOCUMENT STATUS	P1	RELEASE DATE	2023/02/24 12:54:48

FORMAT: Met-lega-master-tb-prod-A3
REVISION: E1
DATE: 2021/05/01