DRAWING MADE IN THIRD ANGLE PROJECTION

671834-2 | 671834-2

/home/us016926/DMTECmod

PART NUMBER	REV	FIRST USED
671834-2	AB	1-471273-2

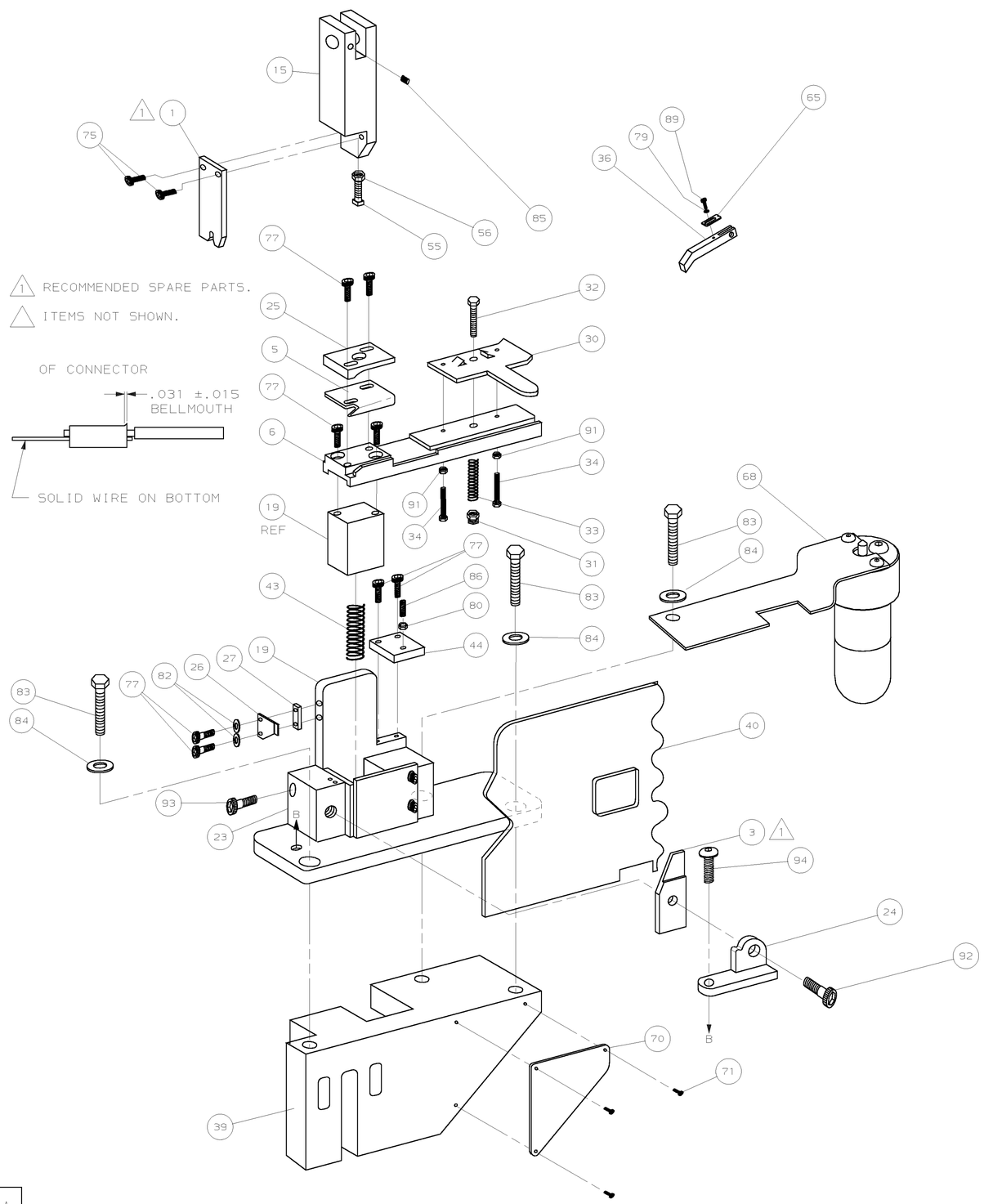

TERMINAL NAME: LENGTHWISE AMPLIVAR THRU SPLICE		
		41766
		41900
		42084
		60667
TERM APPL SPEC		114-2009

CRIMPING DATA			
CRIMP HEIGHT		WIRE SIZE	
.080		19 MAG & 14 STR	
-		-	
-		-	
-		-	
CRIMP	SIZE	TYPE	RANGE
WIRE	.140	F	3000-7000 CMA
INSUL	-	-	-
FEED	APPL INST	SET UP GAGE	LAYOUT
.270	408-8014	-	-
WIRE STRIP LENGTH		.279-.341	

-2	U/M	DWG SIZE	PART NO	DESCRIPTION	ITEM NO
-	-	-	-	-	129
-	-	-	-	-	128
-	-	-	-	-	127
-	-	-	-	-	126
-	-	-	-	-	125
-	-	-	-	-	124
-	-	-	-	-	123
-	-	-	-	-	122
-	-	-	-	-	121
-	-	-	-	-	120
-	-	-	-	-	119
-	-	-	-	-	118
-	-	-	-	-	117
-	-	-	-	-	116
-	-	-	-	-	115
-	-	-	-	-	114
-	-	-	-	-	113
-	-	-	-	-	112
-	-	-	-	-	111
-	-	-	-	-	110
-	-	-	-	-	109
-	-	-	-	-	108
-	-	-	-	-	107
-	-	-	-	-	106
-	-	-	-	-	105
-	-	-	-	-	104
-	-	-	-	-	103
-	-	-	-	-	102
-	-	-	-	-	101
-	-	-	-	-	100
-	-	-	-	-	99
-	-	-	-	-	98
-	-	-	-	-	97
-	-	-	-	-	96
-	-	-	-	-	95
-	-	-	-	-	94
1	-	A	3-21001-4	SCR, SHC, 3/8-16 X .88	93
1	-	A	21001-4	SCR, SHC, 1/4-20 X .75	92
2	-	A	21018-7	NUT, HEX, 10-32	91
-	-	-	-	-	90
1	-	A	2-21000-5	SCR, SHC, 8-32 X .25	89
-	-	-	-	-	88
-	-	-	-	-	87
1	-	A	3-21000-9	SCR, SOC SET, 10-32 X 1.25	86
1	-	A	21009-2	SCR, SOC SET, 1/4-20 X .25	85
3	-	A	371178	WASHER, FLAT, 3/8	84
3	-	A	3-21015-2	SCR, HEX HD, 3/8-16 X 1.25	83
2	-	A	21055-7	WASHER, FLAT, NO 10	82
-	-	-	-	-	81
1	-	A	21018-7	NUT, HEX 10-32	80
1	-	A	21055-6	WASHER, FLAT, #8	79
-	-	-	-	-	78
6	-	A	3-21000-6	SCR, SHC, 10-32 X .62	77
					76
2	-	A	21001-2	SCR, SHC, 1/4-20 X .62	75
-	-	-	-	-	74

REVISION OF EACH ASSY NO (WHEN BLANK, USE DWG REVISION)

PARTS LIST

-2	U/M	DWG SIZE	PART NO	DESCRIPTION	ITEM NO
-	-	-	-	-	73
-	-	-	-	-	72
3	-	A	21017-6	SCREW,DRIVE 4-40 X .25	71
1	-	C	452373-1	PLATE,IDENTIFICATION	70
					69
1	-	-	465184-2	LUBRICATOR ASSY	68
-	-	-	-	-	67
-	-	-	-	-	66
1	-	A	374999	TENSION ADJ PLATE	65
1	-	D	690021-1	AIR FEED ASSY	64
-	-	-	-	-	63
-	-	-	-	-	62
-	-	-	-	-	61
-	-	-	-	-	60
-	-	-	-	-	59
-	-	-	-	-	58
-	-	-	-	-	57
1	-	-	22202-1	NUT, HEX JAM, 1/4-20	56
1	-	-	21077-7	SCR, SO HD SET, 1/4-20 X 1.50	55
-	-	-	-	-	54
-	-	-	-	-	53
-	-	-	-	-	52
-	-	-	-	-	51
-	-	-	-	-	50
-	-	-	-	-	49
-	-	-	-	-	48
-	-	-	-	-	47
-	-	-	-	-	46
-	-	-	-	-	45
1	-	-	372998	RETAINER,FEED PLATE	44
1	-	A	2-24017-7	SPRING SLIDE	43
-	-	-	-	-	42
-	-	-	-	-	41
1	-	-	460582-1	GUARD	40
1	-	C	570238	BASE CASTING	39
-	-	-	-	-	38
-	-	-	-	-	37
1	-	-	452817-1	FEED FINGER	36
-	-	-	-	-	35
2	-	A	372997	ADJ. SCREW,STOCK DRAG	34
1	-	A	23846-7	SPRING,STOCK DRAG	33
1	-	-	21015-8	STUD,STOCK DRAG	32
1	-	A	21022-4	NUT,STOCK DRAG HANDLE	31
1	-	-	372990	STOCK DRAG	30
-	-	-	-	-	29
-	-	-	-	-	28
1	-	-	379011	SPACER,CLEANER	27
1	-	-	810995-2	STRIPPER	26
1	-	-	376945	WIRE GUIDE	25
-	-	-	-	-	24
1	-	-	374348	ANVIL HOLDER	23
-	-	-	-	-	22
-	-	-	-	-	21
-	-	-	-	-	20
1	-	C	473933	APPLICATOR MOUNT ASSY	19
-	-	-	-	-	18
-	-	-	-	-	17
-	-	-	-	-	16
1	-	B	471057	RAM	15
-	-	-	-	-	14
-	-	-	-	-	13
-	-	-	-	-	12
-	-	-	-	-	11
-	-	-	-	-	10
-	-	-	-	-	9
-	-	-	-	-	8
-	-	-	-	-	7
1	-	A	386595	PLATE,FEED	6
1	-	B	386502	BLADE,SHEAR	5
-	-	-	-	-	4
1	-	B	1-473503-5	ANVIL	3
-	-	-	-	-	2
1	-	C	456411-1	CRIMPER,WIRE	1

REVISION OF EACH ASSY NO (WHEN BLANK, USE DWG REVISION)

QTY REQD PER ASSY

PARTS LIST

P	F	LTR	REVISION RECORD	APP	DATE
		AB	ECN 0150-0356-03	TE	4-03
		AA	0150-8138-97	TB	11-97
		Z	0150-6191-95	CE	6-95
		Y	0150-5843-94	TB	12-94
		W	0150-5229-94	CE	2-94

DIMENSIONS IN INCHES.
DO NOT SCALE PRINT.
TOLERANCES UNLESS OTHERWISE SPECIFIED:
2 PLC DEC ±-
3 PLC DEC ±-
4 PLC DEC ±-
ANGLES ± -
SURF TEXTURE, √
REMOVE BURRS, BREAK SHARP EDGES R.015 MAX

MATL - - | HT TR - - | FIN - -

DR 5/17/93 R. LEHR/UTA | APP 2-17-94 B WOLFE | CHK 2-17-94 C ERISMAN | REL 3/10/94 B. MORGAN

AMP Incorporated, Harrisburg, PA 17105-3608

NAME END FEED STANDARD APPLICATOR | MACHINE REF STD APPL

SCALE 1:4 | D | DWG NO 671834-2 | SHEET 1 OF 1 | REV AB

CAGE CODE 00779 | CUSTOMER AND ASSEMBLY DRAWING | RESTRICTED TO

THIS DRAWING IS A CONTROLLED DOCUMENT.
THIS DRAWING IS UNPUBLISHED. © COPYRIGHT 19 BY AMP INCORPORATED. ALL RIGHTS RESERVED. RELEASED FOR PUBLICATION 19

A 4

AMP 1756 REV 12-89 | 02-APR-03 | 10:37:19 us016926