NOT RECOMMENDED FOR NEW DESIGN
CONTACT US

Lead-free Green

MMBD5004BRM

HIGH VOLTAGE SURFACE MOUNT SWITCHING DIODE ARRAY

Features

- Two Series Diode Circuits Connect to Form Full Wave Bridge
- Fast Switching Speed
- Low Capacitance
- 400V Reverse Breakdown Voltage Rating
- **Totally Lead Free & Fully RoHS Compliant (Notes 1 & 2)**
- **Halogen and Antimony Free. "Green" Device (Note 3)**

Mechanical Data

- Case: SOT-26
- Case Material: Molded Plastic, "Green" Molding Compound. UL Flammability Classification Rating 94V-0
- Moisture Sensitivity: Level 1 per J-STD-020
- Terminals: Matte Tin Finish Annealed over Copper Leadframe (Lead Free Plating). Solderable per MIL-STD-202, Method 208 e3
- Polarity: See Diagram
- Weight: 0.016 grams (Approximate)

SOT-26

TOP VIEW

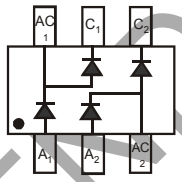

TOP VIEW
Internal Schematic

Ordering Information (Note 4)

Part Number	Case	Packaging
MMBD5004BRM-7	SOT-26	3,000/Tape & Reel

Notes:
1. No purposely added lead. Fully EU Directive 2002/95/EC (RoHS) & 2011/65/EU (RoHS 2) compliant.
2. See http://www.diodes.com/quality/lead_free.html for more information about Diodes Incorporated's definitions of Halogen- and Antimony-free, "Green" and Lead-free.
3. Halogen- and Antimony-free "Green" products are defined as those which contain <900ppm bromine, <900ppm chlorine (<1500ppm total Br + Cl) and <1000ppm antimony compounds.
4. Please see http://www.diodes.com/package-outlines.html for the latest version.

Marking Information

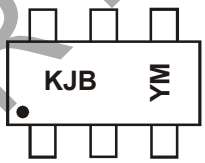

KJB = Product Type Marking Code
YM = Date Code Marking
Y = Year (ex: W = 2009)
M = Month (ex: 9 = September)

Date Code Key

Year	2009	2010	…	2016	2017	2018	2019
Code	W	X	…	D	E	F	G

Month	Jan	Feb	Mar	Apr	May	Jun	Jul	Aug	Sep	Oct	Nov	Dec
Code	1	2	3	4	5	6	7	8	9	O	N	D

NOT RECOMMENDED FOR NEW DESIGN

© Diodes Incorporated

Maximum Ratings (@T_A = +25°C, unless otherwise specified.)

Characteristic	Symbol	Value	Unit
Repetitive Peak Reverse Voltage	V_{RRM}	400	V
Working Peak Reverse Voltage DC Blocking Voltage	V_{RWM} V_R	350	V
RMS Reverse Voltage	$V_{R(RMS)}$	247	V
Forward Continuous Current	I_F	225	mA
Peak Repetitive Forward Current	I_{FRM}	625	mA
Non-Repetitive Peak Forward Surge Current @ t = 1.0ms @ t = 1.0s	I_{FSM}	2.0 1.0	A

Thermal Characteristics

Characteristic	Symbol	Value	Unit
Power Dissipation (Note 5)	P_D	350	mW
Thermal Resistance Junction to Ambient Air (Note 5)	$R_{\theta JA}$	357	°C/W
Operating and Storage Temperature Range	T_J, T_{STG}	-65 to +150	°C

Electrical Characteristics (@T_A = +25°C, unless otherwise specified.)

Characteristic	Symbol	Min	Typ	Max	Unit	Test Condition
Reverse Breakdown Voltage (Note 6)	$V_{(BR)R}$	400	—	—	V	I_R = 150μA
Forward Voltage	V_F	—	— — —	0.93 1.10 1.29	V	I_F = 20mA I_F = 100mA I_F = 200mA
Reverse Current (Note 6)	I_R	—	— — —	100 100 5	nA μA μA	V_R = 240V V_R = 240V, T_J = 150°C V_R = 360V
Total Capacitance	C_T	—	0.7	2.0	pF	V_R = 0V, f = 1.0MHz
Reverse Recovery Time	t_{rr}	—	—	50	ns	$I_F = I_R$ = 30mA, I_{rr} = 3.0mA, R_L = 100Ω

Notes:
5. Part mounted on polyimide substrate PC board with recommended pad layout, which can be found on our website at http://www.diodes.com/package- outlines.html.
6. Short duration pulse test used to minimize self-heating effect.

NOT RECOMMENDED FOR NEW DESIGN

© Diodes Incorporated

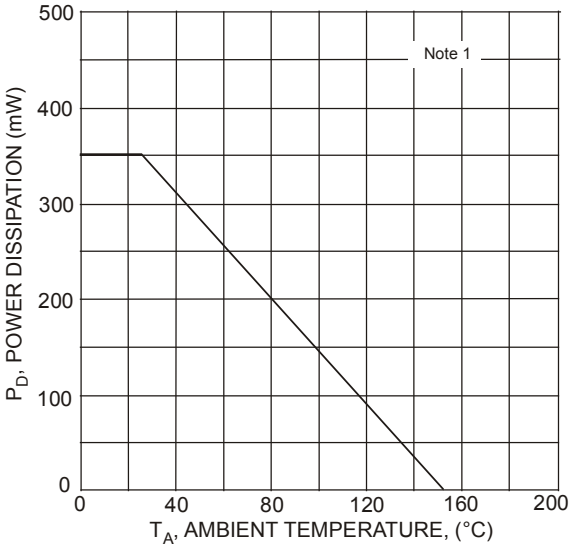

Fig. 1 Power Derating Curve, Total Package

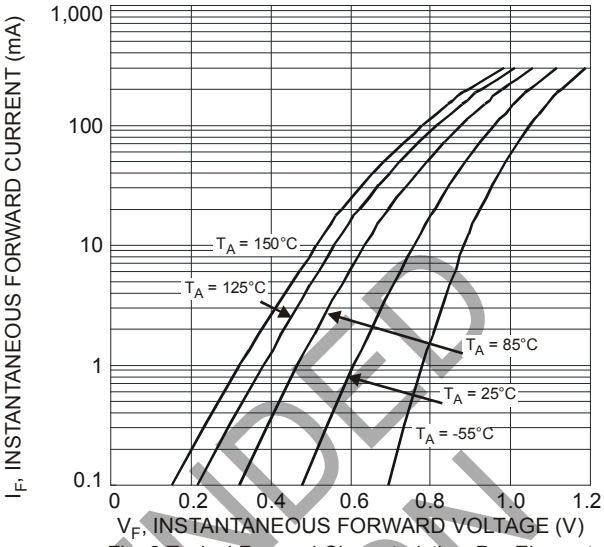

Fig. 2 Typical Forward Characteristics, Per Element

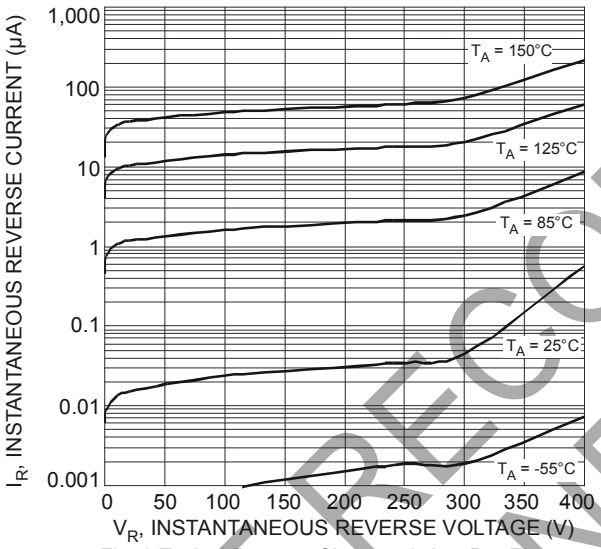

Fig. 3 Typical Reverse Characteristics, Per Element

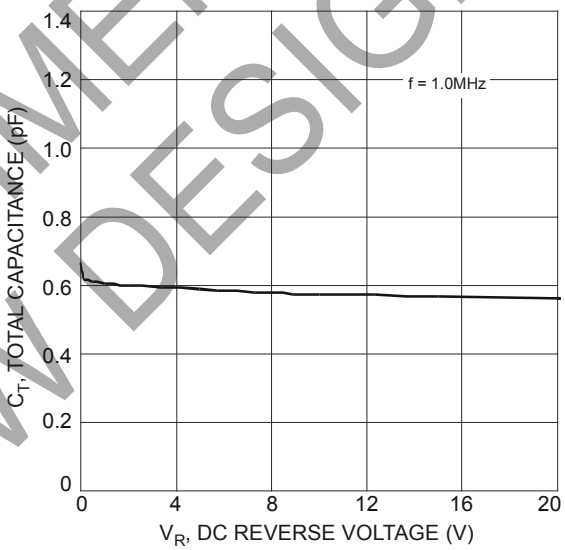

Fig. 4 Total Capacitance vs. Reverse Voltage, Per Element

NOT RECOMMENDED FOR NEW DESIGN

© Diodes Incorporated

Package Outline Dimensions

Please see http://www.diodes.com/package-outlines.html for the latest version.

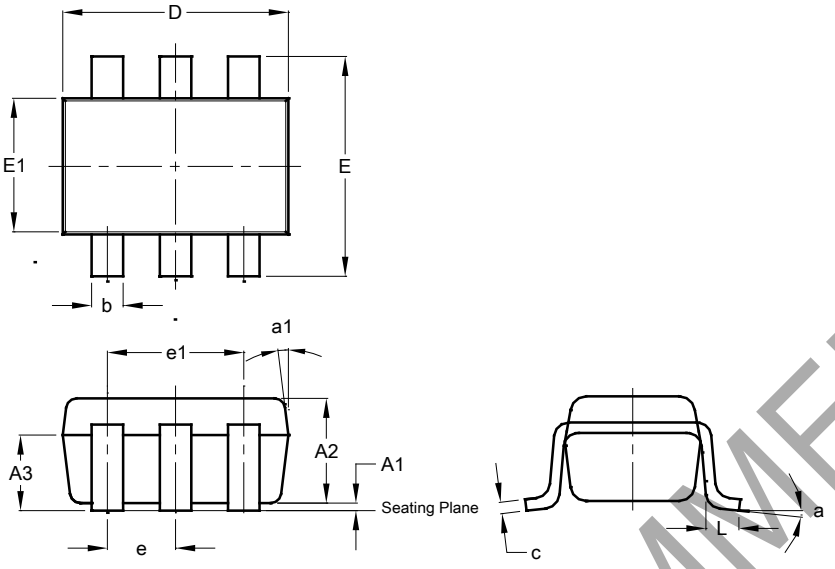

SOT26 / SC74R			
Dim	**Min**	**Max**	**Typ**
A1	0.013	0.10	0.05
A2	1.00	1.30	1.10
A3	0.70	0.80	0.75
b	0.35	0.50	0.38
c	0.10	0.20	0.15
D	2.90	3.10	3.00
e	-	-	0.95
e1	-	-	1.90
E	2.70	3.00	2.80
E1	1.50	1.70	1.60
L	0.35	0.55	0.40
a	-	-	8°
a1	-	-	7°
All Dimensions in mm			

Suggested Pad Layout

Please see http://www.diodes.com/package-outlines.html for the latest version.

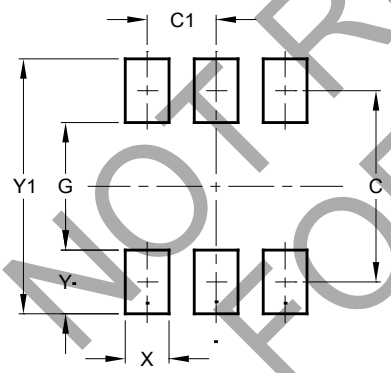

Dimensions	Value (in mm)
C	2.40
C1	0.95
G	1.60
X	0.55
Y	0.80
Y1	3.20

NOT RECOMMENDED FOR NEW DESIGN

© Diodes Incorporated

Application Examples

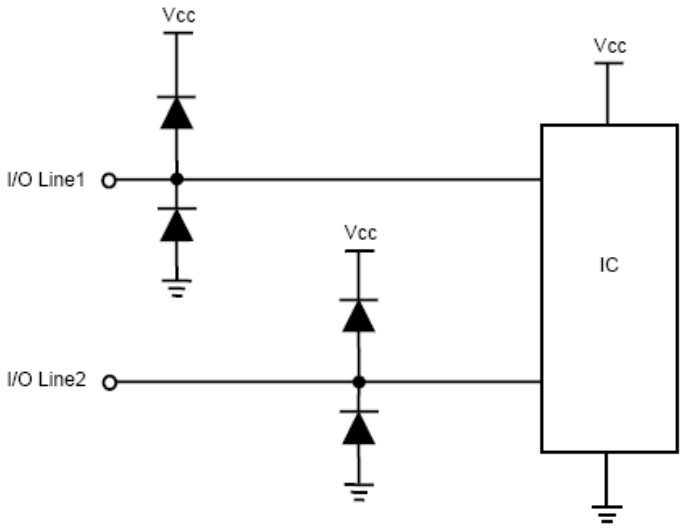

Figure 1. Typical Rail-to-Rail Protection

MMBD5004BRM

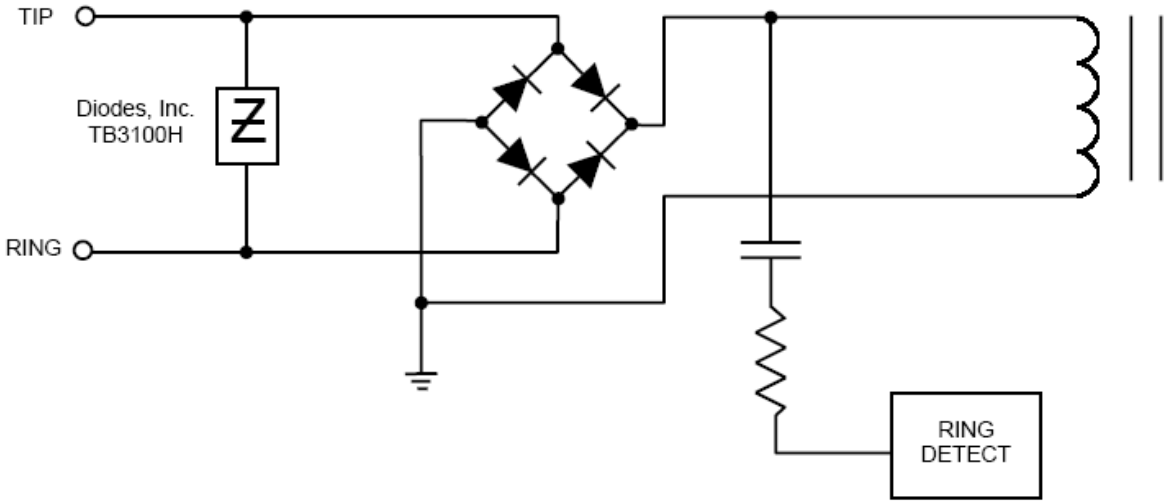

Figure 2. Typical Transformer Coupled Tip and Ring Interface

© Diodes Incorporated

IMPORTANT NOTICE

1. DIODES INCORPORATED AND ITS SUBSIDIARIES ("DIODES") MAKE NO WARRANTY OF ANY KIND, EXPRESS OR IMPLIED, WITH REGARDS TO ANY INFORMATION CONTAINED IN THIS DOCUMENT, INCLUDING, BUT NOT LIMITED TO, THE IMPLIED WARRANTIES OF MERCHANTABILITY, FITNESS FOR A PARTICULAR PURPOSE OR NON-INFRINGEMENT OF THIRD PARTY INTELLECTUAL PROPERTY RIGHTS (AND THEIR EQUIVALENTS UNDER THE LAWS OF ANY JURISDICTION).

2. The Information contained herein is for informational purpose only and is provided only to illustrate the operation of Diodes products described herein and application examples. Diodes does not assume any liability arising out of the application or use of this document or any product described herein. This document is intended for skilled and technically trained engineering customers and users who design with Diodes products. Diodes products may be used to facilitate safety-related applications; however, in all instances customers and users are responsible for (a) selecting the appropriate Diodes products for their applications, (b) evaluating the suitability of the Diodes products for their intended applications, (c) ensuring their applications, which incorporate Diodes products, comply the applicable legal and regulatory requirements as well as safety and functional-safety related standards, and (d) ensuring they design with appropriate safeguards (including testing, validation, quality control techniques, redundancy, malfunction prevention, and appropriate treatment for aging degradation) to minimize the risks associated with their applications.

3. Diodes assumes no liability for any application-related information, support, assistance or feedback that may be provided by Diodes from time to time. Any customer or user of this document or products described herein will assume all risks and liabilities associated with such use, and will hold Diodes and all companies whose products are represented herein or on Diodes' websites, harmless against all damages and liabilities.

4. Products described herein may be covered by one or more United States, international or foreign patents and pending patent applications. Product names and markings noted herein may also be covered by one or more United States, international or foreign trademarks and trademark applications. Diodes does not convey any license under any of its intellectual property rights or the rights of any third parties (including third parties whose products and services may be described in this document or on Diodes' website) under this document.

5. Diodes products are provided subject to Diodes' Standard Terms and Conditions of Sale (https://www.diodes.com/about/company/terms-and-conditions/terms-and-conditions-of-sales/) or other applicable terms. This document does not alter or expand the applicable warranties provided by Diodes. Diodes does not warrant or accept any liability whatsoever in respect of any products purchased through unauthorized sales channel.

6. Diodes products and technology may not be used for or incorporated into any products or systems whose manufacture, use or sale is prohibited under any applicable laws and regulations. Should customers or users use Diodes products in contravention of any applicable laws or regulations, or for any unintended or unauthorized application, customers and users will (a) be solely responsible for any damages, losses or penalties arising in connection therewith or as a result thereof, and (b) indemnify and hold Diodes and its representatives and agents harmless against any and all claims, damages, expenses, and attorney fees arising out of, directly or indirectly, any claim relating to any noncompliance with the applicable laws and regulations, as well as any unintended or unauthorized application.

7. While efforts have been made to ensure the information contained in this document is accurate, complete and current, it may contain technical inaccuracies, omissions and typographical errors. Diodes does not warrant that information contained in this document is error-free and Diodes is under no obligation to update or otherwise correct this information. Notwithstanding the foregoing, Diodes reserves the right to make modifications, enhancements, improvements, corrections or other changes without further notice to this document and any product described herein. This document is written in English but may be translated into multiple languages for reference. Only the English version of this document is the final and determinative format released by Diodes.

8. Any unauthorized copying, modification, distribution, transmission, display or other use of this document (or any portion hereof) is prohibited. Diodes assumes no responsibility for any losses incurred by the customers or users or any third parties arising from any such unauthorized use.

Copyright © 2021 Diodes Incorporated

www.diodes.com

NOT RECOMMENDED FOR NEW DESIGN