THIS DRAWING IS UNPUBLISHED. RELEASED FOR PUBLICATION -,- .
© COPYRIGHT - BY TYCO ELECTRONICS CORPORATION. ALL RIGHTS RESERVED.

LOC	DIST
CM	00

REVISIONS

P	LTR	DESCRIPTION	DATE	DWN	APVD
	C	REVISED PER ECO-07-003747	27FEB07	KW	DB
	C1	REVISED PER ECO-09-024717	05NOV09	KK	AEG

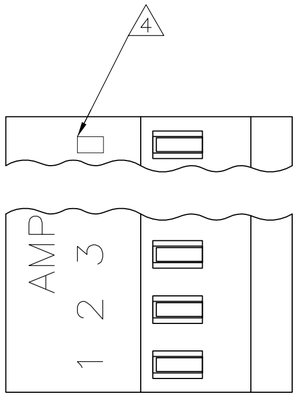

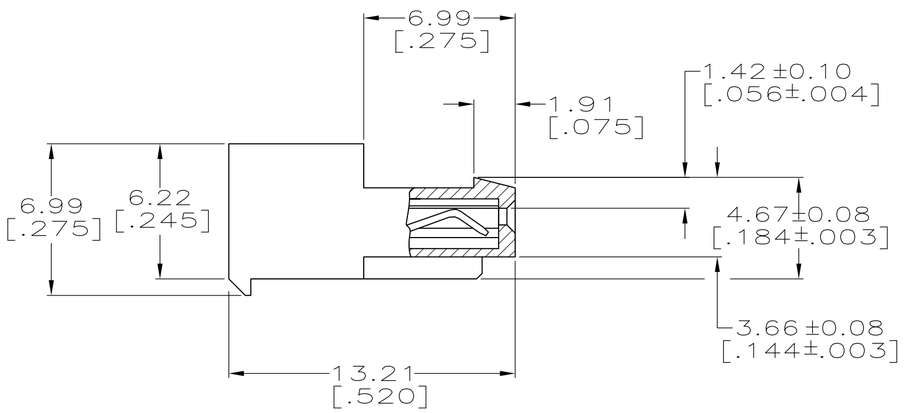

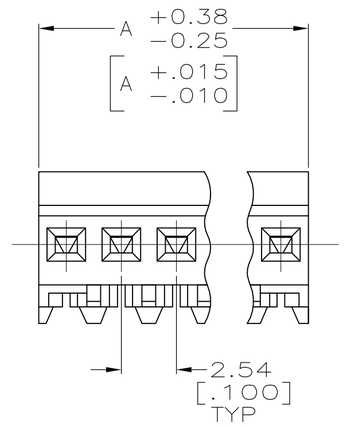

1. MATERIAL: CONNECTOR-NYLON UL94V-0 (BLACK). CONTACTS-0.30 [.012] THICK COPPER ALLOY 0.00076 [.000030] GOLD IN CONTACT AREA WITH BRIGHT TIN-LEAD FOR 644315-2 THRU 644315-6, MATTE WHISKER MITIGATED TIN FOR 3-644315-2 THRU 4-644315-5 OVER NICKEL UNDERPLATE.
2. CONTACTS ACCEPT 26 AWG WIRE WITH 1.52[.060] MAX INSULATION DIAMETER.
3. CONTACTS MUST ACCEPT 0.64±0.03[.025±.001] SQUARE POST AND REMAIN LOCKED IN POSITION.
4. IDENTIFICATION NUMBER FOR LAST CIRCUIT MAY NOT APPEAR ON ALL ASSEMBLIES.
5. DIMENSIONS IN BRACKETS ARE IN INCHES.
6. HOUSING FEATURES ARE: CLOSED END WITH LOCKING RAMP.
7. OBSOLETE PARTS: OBSOLETE CIS STREAMLINING PER D.RENAUD/D.SINISI

	DIM A	NO OF CIRCUITS	PART NO
	38.10 [1.500]	15	4-644315-5
	27.94 [1.100]	11	4-644315-1
	15.24 [.600]	6	3-644315-6
	10.16 [.400]	4	3-644315-4
	5.08 [.200]	2	3-644315-2
7 SUPERCEDED	15.24 [.600]	6	~~644315-6~~
7 SUPERCEDED	10.16 [.400]	4	~~644315-4~~
	5.08 [.200]	2	644315-2

644315

METRIC

THIS DRAWING IS A CONTROLLED DOCUMENT.

DIMENSIONS: mm [INCHES]

TOLERANCES UNLESS OTHERWISE SPECIFIED:
0 PLC ± -
1 PLC ± -
2 PLC ± -
3 PLC ± 0.13 [.005]
4 PLC ± -
ANGLES ± -

MATERIAL 1
FINISH 1

DWN K. WHITAKER 21JULY2005
CHK D. BOSSI 21JULY2005
APVD D. BOSSI 21JULY2005
PRODUCT SPEC 108-1050
APPLICATION SPEC 114-1019
WEIGHT -

Tyco Electronics
Tyco Electronics Corporation
Harrisburg, Pa 17105-3608

NAME MTA 100 CONNECTOR ASSEMBLY, 26 AWG,UL94V-0, SPECIAL

SIZE	CAGE CODE	DRAWING NO	RESTRICTED TO
A2	00779	C-644315	-

CUSTOMER DRAWING | SCALE 5:1 | SHEET 1 OF 1 | REV C1

AMP 1471-9 REV 31MAR2000