MATERIAL NO.	ENGINEERING NO.	FINISHED LENGTH
1300120382	339020A01F030	3 FT (0.91 M)
1300120399	339020A01F300	30 FT (9.14 M)
1300120409	339020A01F750	75 FT (22.86 M)

B

CABLE LENGTH TOLERANCES
<.3M [1FT]: +19mm-0 [+.75in-0]
.3 - .9M [1 - 3FT]: +44.5mm-0 [+1.75in-0]
.9 - 1.8M [3 - 6FT]: +55.6mm-0 [+2.19in-0]
1.8 - 3.7M [6 - 12FT: +88.9mm-0 [+3.50in-0]
3.7 - 7.3M [12 - 24FT]: +165.1mm-0 [+6.50in-0]
7.3-14.6M [24 - 48FT]: +317.5mm-0 [+12.50in-0]
14.6 - 30.5M [48-100FT]: +622.3mm-0 [+24.50in-0]
OVER 30M [100FT] +2% OF FINISHED LENGTH

B

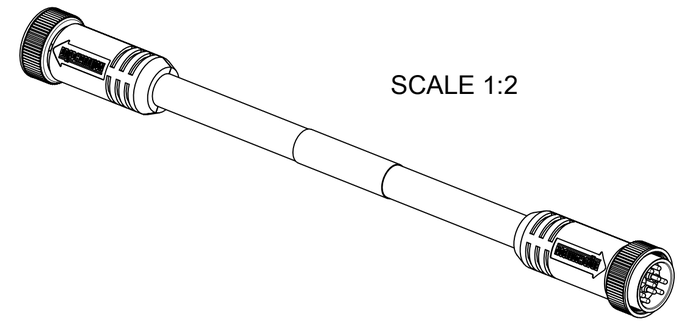

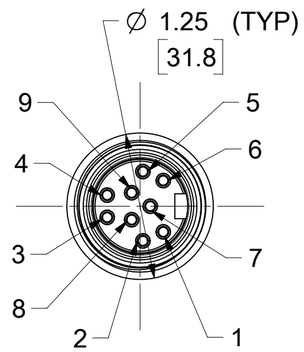

FEMALE FACE VIEW

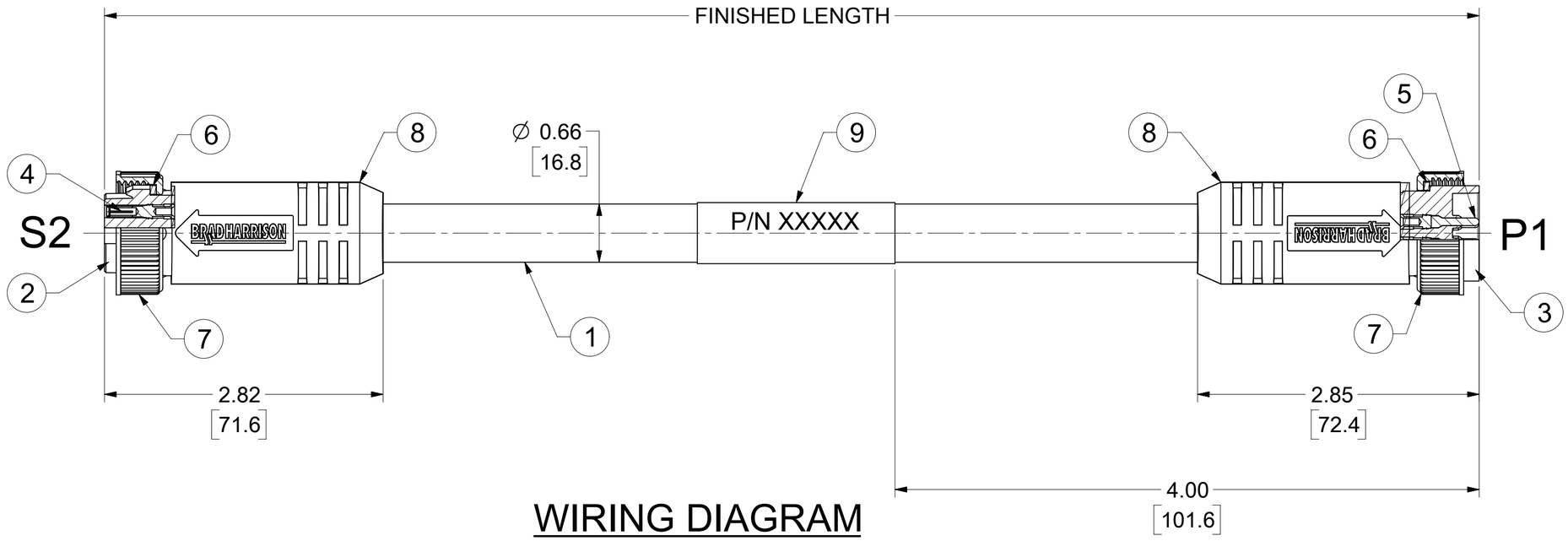

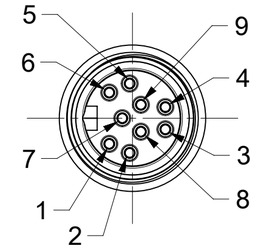

MALE FACE VIEW

NOTES:
1. MATERIAL: AS NOTED
2. FINISH: AS NOTED
3. ELECTRICAL:
   VOLTAGE: 320V PER IEC60664
   600V PER UL2238 (B)
   CURRENT: 7A
4. TEMP RATING: -20°C TO +105°C (B)
5. PROTECTION: IP67 (WHEN MATED)
6. CSA CERTIFIED FILE: LR6837 (B)
7. UL RECOGNIZED FILE: E152210
8. COUPLING THREAD: 1 1/8"-16UN
9. ASSEMBLY IS ROHS COMPLIANT
10. ALL DIMS ARE FOR REFERENCE UNLESS TOLERANCED OR NOTED OTHERWISE

WIRING DIAGRAM

S2		P1
1	ORANGE	1
2	BLUE	2
3	RED/BLACK	3
4	GREEN/BLACK	4
5	WHITE	5
6	RED	6
7	GREEN/YELLOW	7
8	WHITE/BLACK	8
9	BLACK	9

PART NUMBER LEGEND (B)

339020A01F030

FINISHED LENGTH
F001= .1 FT
F020= 2 FT
F200= 20 FT

ITEM	DESCRIPTION	MATERIAL	FINISH	
9	WRAP LABEL	VINYL	BLACK/YELLOW	B
8	OVERMOLD	TPE	YELLOW	B
7	COUPLING NUT	ZINC DIE CAST	BLACK E-COAT	
6	FRICTION RING	NYLON	WHITE	
5	PIN CONTACT	Cu ALLOY	GOLD OVER NICKEL	
4	SOCKET CONTACT	Cu ALLOY	GOLD OVER NICKEL	
3	MALE INSERT	TPE	YELLOW	B
2	FEMALE INSERT	TPE	YELLOW	B
1	#16-9 CABLE, STOOW/ST	PVC JACKET	YELLOW	

DOCUMENT STATUS	P1	RELEASE DATE	2022/04/08 14:05:52

THIS DRAWING CONTAINS INFORMATION THAT IS PROPRIETARY TO MOLEX ELECTRONIC TECHNOLOGIES, LLC AND SHOULD NOT BE USED WITHOUT WRITTEN PERMISSION

FUNCTIONAL SYMBOLS: FA = 0, FC = 0, FP = 0
DIVISIONAL SYMBOLS

DIMENSION UNITS: mm
SCALE: 1:1
GENERAL TOLERANCES (UNLESS SPECIFIED)

	MM	INCH
4 PLACES	±	±
3 PLACES	±	±
2 PLACES	±	±
1 PLACE	±	±
0 PLACES	±	±
ANGULAR TOL	± °	

DRAFT WHERE APPLICABLE MUST REMAIN WITHIN DIMENSIONS

CURRENT REV DESC: UPDATED ITEM #2,3,8,9, MATERIAL P/N TABLE. ADDED CSA, UL, IEC VOLT, TEMP RATING, IP RATING, TOL.CHART & PART NUMBER LEGEND

EC NO: 701162
DRWN: AKABADI 2021/11/15
CHK'D: RSTONE 2022/03/30
APPR: BWOODMAN 2022/04/08

INITIAL REVISION:
DRWN: RSTONE 2009/03/26
APPR: JFMURPHY 2009/04/01

THIRD ANGLE PROJECTION | DRAWING: C-SIZE | SERIES: 130012

molex

MINI-CHANGE CORDSET, C SIZE
9 POLE, MALE/FEMALE, STRAIGHT, SINGLE KEY, 16AWG

PRODUCT CUSTOMER DRAWING

DOCUMENT NUMBER	DOC TYPE	DOC PART	REVISION
SD-130012-001	PSD	001	B

MATERIAL NUMBER	CUSTOMER	SHEET NUMBER
SEE TABLE	GENERAL MARKET	1 OF 1