STD7NM80

Datasheet

N-channel 800 V, 0.95 Ω typ., 6.5 A MDmesh Power MOSFET in a DPAK package

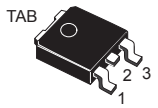

DPAK

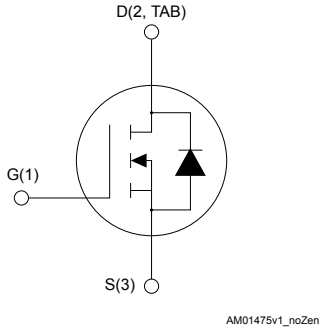

Product status link
STD7NM80

Product summary	
Order code	STD7NM80
Marking	D7NM80
Package	DPAK
Packing	Tape and reel

Features

Order code	V_{DS}	$R_{DS(on)}$ max.	I_D
STD7NM80	800 V	1.05 Ω	6.5 A

- 100% avalanche tested
- Low input capacitance and gate charge
- Low gate input resistance

Applications

- Switching applications

Description

This N-channel Power MOSFET is developed using STMicroelectronics' revolutionary MDmesh technology, which associates the multiple drain process with the company's PowerMESH horizontal layout. This device offers extremely low on-resistance, high dv/dt, and excellent avalanche characteristics. Using STMicroelectronics's proprietary strip technique, this Power MOSFET boasts an overall dynamic performance that is superior to similar products on the market.

1 Electrical ratings

Table 1. Absolute maximum ratings

Symbol	Parameter	Value	Unit
V_{DS}	Drain-source voltage	800	V
V_{GS}	Gate-source voltage	±30	V
I_D	Drain current (continuous) at T_C = 25 °C	6.5	A
	Drain current (continuous) at T_C = 100 °C	4	
I_{DM}(1)	Drain current (pulsed)	26	A
P_{TOT}	Total power dissipation at T_C = 25 °C	90	W
T_{stg}	Storage temperature range	-55 to 150	°C
T_J	Operating junction temperature range		°C

1. *Pulse width is limited by safe operating area.*

Table 2. Thermal data

Symbol	Parameter	Value	Unit
R_{thJC}	Thermal resistance, junction-to-case	1.4	°C/W
R_{thJA}(1)	Thermal resistance, junction-to-ambient	50	°C/W

1. *When mounted on 1 inch^2 FR-4, 2 Oz copper board.*

Table 3. Avalanche characteristics

Symbol	Parameter	Value	Unit
I_{AS}	Avalanche current, repetitive or non-repetitive (pulse width limited by T_J max.)	1	A
E_{AS}	Single pulse avalanche energy (starting T_J = 25 °C, I_D = I_{AS}, V_{DD} = 50 V)	240	mJ

2 Electrical characteristics

T_C = 25 °C unless otherwise specified.

Table 4. On/off states

Symbol	Parameter	Test condition	Min.	Typ.	Max.	Unit
$V_{(BR)DSS}$	Drain-source breakdown voltage	I_D = 1 mA, V_{GS} = 0 V	800			V
I_{DSS}	Zero gate voltage drain current	V_{GS} = 0 V, V_{DS} = 800 V			10	µA
		V_{GS} = 0 V, V_{DS} = 800 V, T_C = 125 °C[1]			100	
I_{GSS}	Gate body leakage current	V_{DS} = 0 V, V_{GS} = ±30 V			±100	nA
$V_{GS(th)}$	Gate threshold voltage	V_{DS} = V_{GS}, I_D = 250 µA	3	4	5	V
$R_{DS(on)}$	Static drain-source on-resistance	V_{GS} = 10 V, I_D = 3.25 A		0.95	1.05	Ω

1. *Specified by design, not tested in production.*

Table 5. Dynamic

Symbol	Parameter	Test condition	Min.	Typ.	Max.	Unit
C_{iss}	Input capacitance	V_{DS} = 50 V, f = 1 MHz, V_{GS} = 0 V	-	620	-	pF
C_{oss}	Output capacitance		-	460	-	pF
C_{rss}	Reverse transfer capacitance		-	15	-	pF
R_g	Gate input resistance	f = 1 MHz open drain	-	7	-	Ω
Q_g	Total gate charge	V_{DD} = 640 V, I_D = 6.5 A, V_{GS} = 0 to 10 V (see Figure 13. Test circuit for gate charge behavior)	-	18	-	nC
Q_{gs}	Gate-source charge		-	4	-	nC
Q_{gd}	Gate-drain charge		-	11	-	nC

Table 6. Switching times

Symbol	Parameter	Test condition	Min.	Typ.	Max.	Unit
$t_{d(on)}$	Turn-on delay time	V_{DD} = 400 V, I_D = 3.25 A, R_G = 4.7 Ω, V_{GS} = 10 V (see Figure 12. Test circuit for resistive load switching times and Figure 17. Switching time waveform)	-	20	-	ns
t_r	Rise time		-	8	-	ns
$t_{d(off)}$	Turn-off delay time		-	35	-	ns
t_f	Fall time		-	10	-	ns

Table 7. Source-drain diode

Symbol	Parameter	Test condition	Min.	Typ.	Max.	Unit
I_{SD}	Source-drain current		-		6.5	A
I_{SDM}[1]	Source-drain current (pulsed)		-		26	A
V_{SD}[2]	Forward on voltage	I_{SD} = 6.5 A, V_{GS} = 0 V	-		1.3	V
t_{rr}	Reverse recovery time	I_{SD} = 6.5 A, di/dt = 100 V	-	460		ns
Q_{rr}	Reverse recovery charge	V_{DD} = 50 V (see Figure 14. Test circuit for inductive load switching and diode recovery times)	-	4		µC
I_{RRM}	Reverse recovery current		-	17		A
t_{rr}	Reverse recovery time	I_{SD} = 6.5 A, di/dt = 100 A/µs	-	680		ns
Q_{rr}	Reverse recovery charge	V_{DD} = 50 V (see Figure 14. Test circuit for inductive load switching and diode recovery times)	-	6		µC
I_{RRM}	Reverse recovery current		-	17		A

1. *Pulse width limited by safe operating area.*
2. *Pulsed: pulse duration = 300 µs, duty cycle 1.5%.*

2.1 Electrical characteristics (curves)

Figure 1. Safe operating area

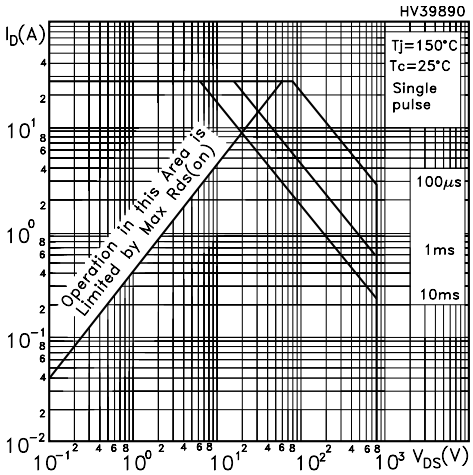

Figure 2. Thermal impedance

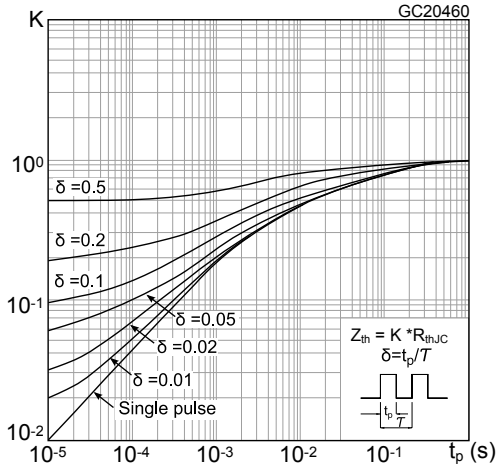

Figure 3. Output characterisics

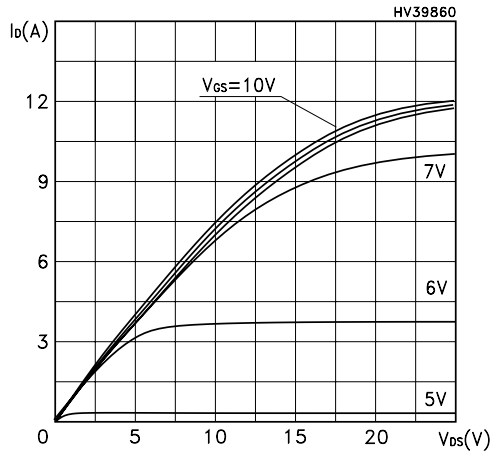

Figure 4. Transfer characteristics

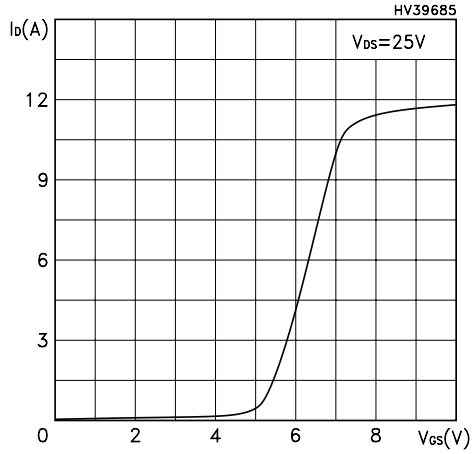

Figure 5. Static drain-source on-resistance

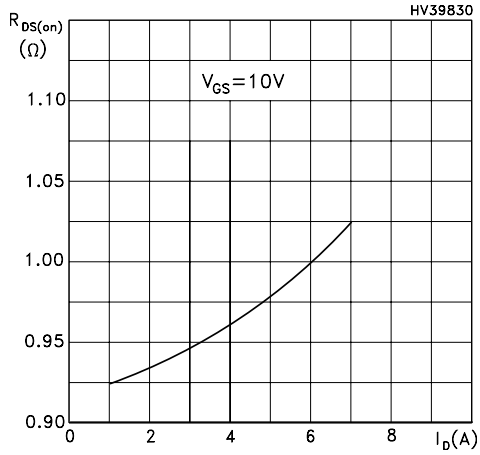

Figure 6. Gate charge vs gate-source voltage

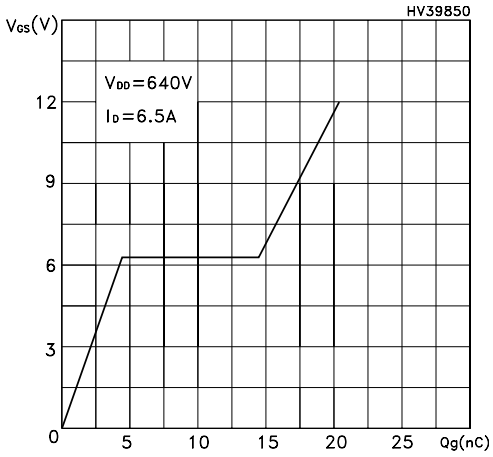

Figure 7. Capacitance variations

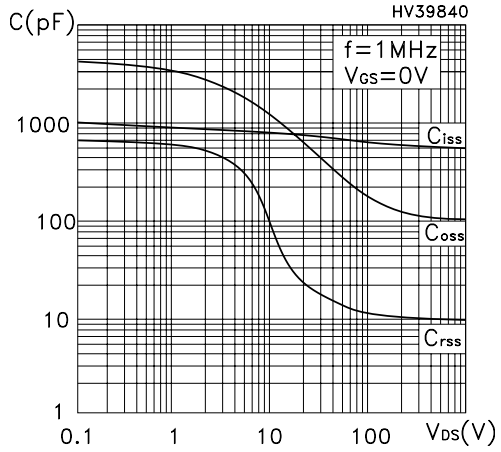

Figure 8. Normalized gate threshold voltage vs temperature

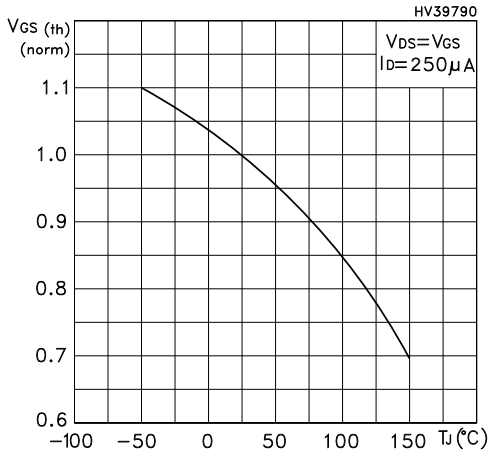

Figure 9. Normalized on-resistance vs temperature

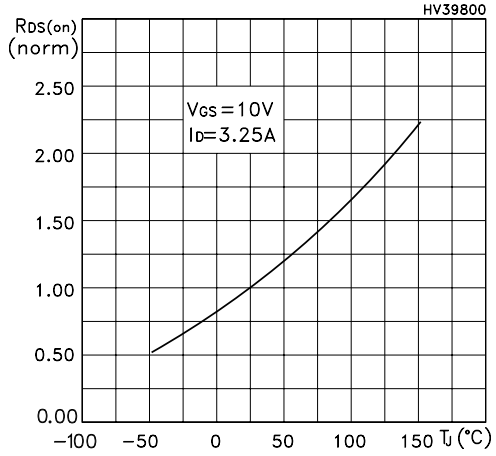

Figure 10. Source-drain diode forward characteristics

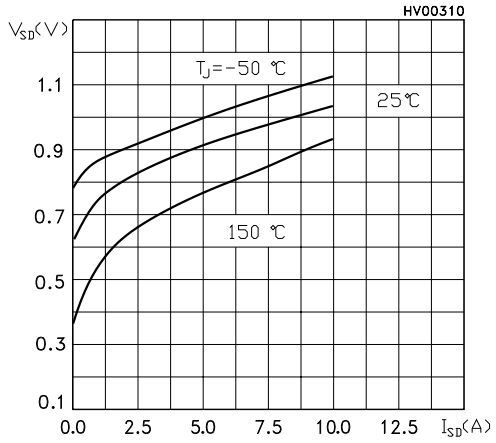

Figure 11. Normalized $V_{(BR)DSS}$ vs temperature

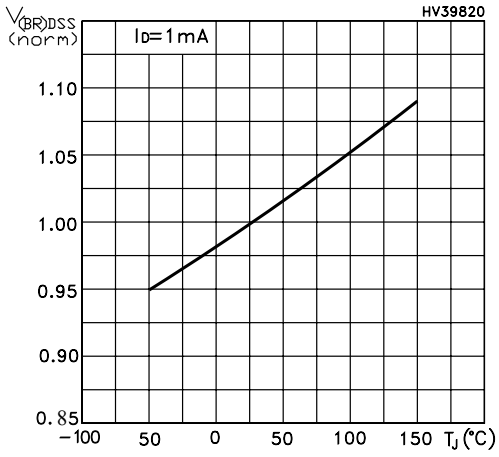

3 Test circuits

Figure 12. Test circuit for resistive load switching times

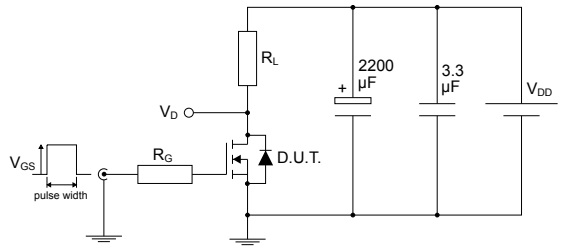

AM01468v1

Figure 13. Test circuit for gate charge behavior

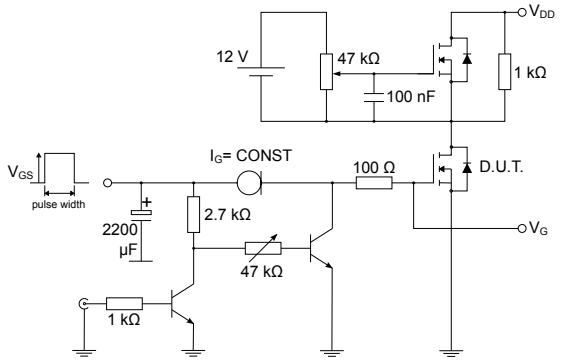

AM01469v1

Figure 14. Test circuit for inductive load switching and diode recovery times

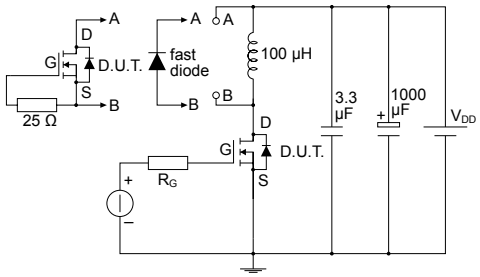

AM01470v1

Figure 15. Unclamped inductive load test circuit

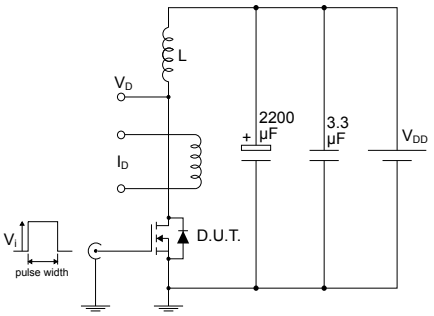

AM01471v1

Figure 16. Unclamped inductive waveform

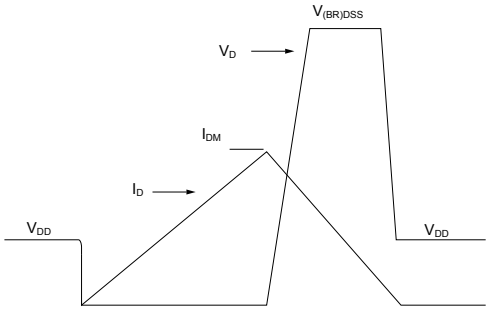

AM01472v1

Figure 17. Switching time waveform

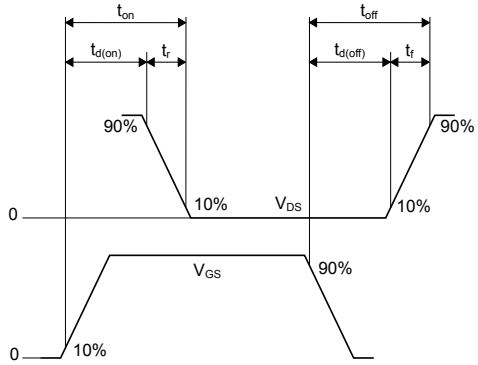

AM01473v1

4 Package information

In order to meet environmental requirements, ST offers these devices in different grades of ECOPACK packages, depending on their level of environmental compliance. ECOPACK specifications, grade definitions and product status are available at: www.st.com. ECOPACK is an ST trademark.

4.1 DPAK (TO-252) type A2 package information

Figure 18. DPAK (TO-252) type A2 package outline

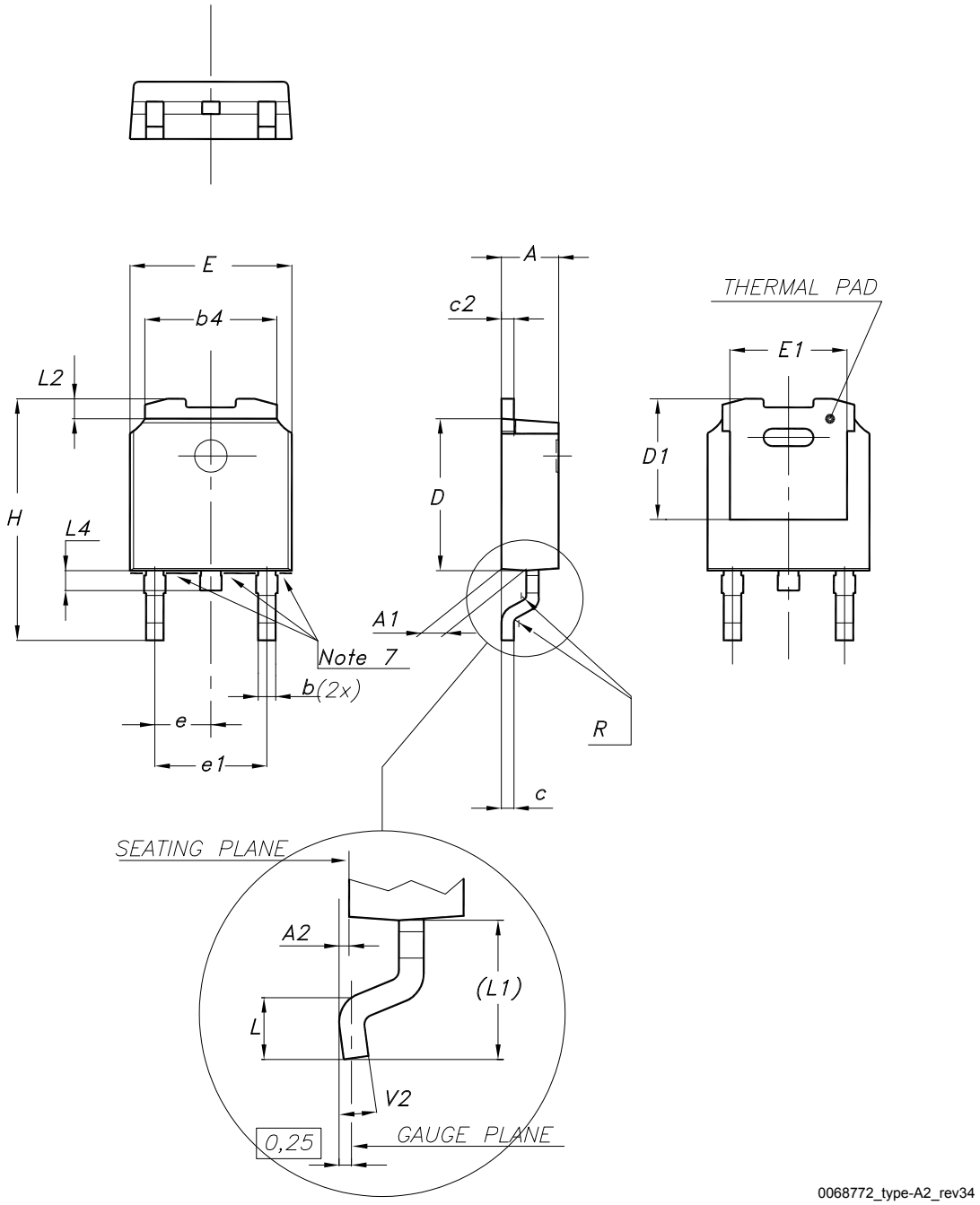

Table 8. DPAK (TO-252) type A2 mechanical data

Dim.	mm		
	Min.	Typ.	Max.
A	2.20		2.40
A1	0.90		1.10
A2	0.03		0.23
b	0.64		0.90
b4	5.20		5.40
c	0.45		0.60
c2	0.48		0.60
D	6.00		6.20
D1	4.95	5.10	5.25
E	6.40		6.60
E1	5.10	5.20	5.30
e	2.159	2.286	2.413
e1	4.445	4.572	4.699
H	9.35		10.10
L	1.00		1.50
L1	2.60	2.80	3.00
L2	0.65	0.80	0.95
L4	0.60		1.00
R		0.20	
V2	0°		8°

4.2 DPAK (TO-252) type C3 package information

Figure 19. DPAK (TO-252) type C3 package outline

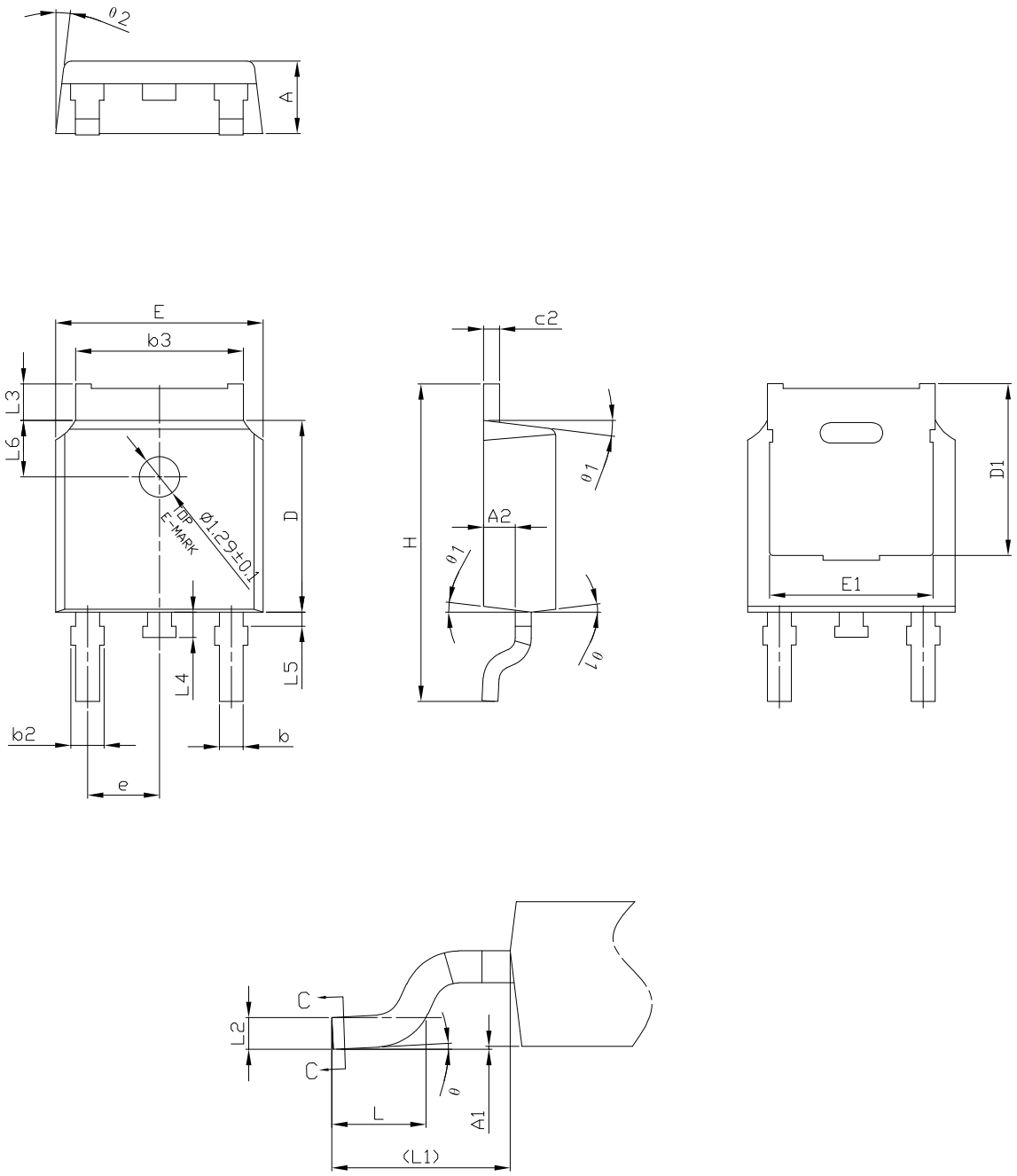

0068772_type-C3_rev34

Table 9. DPAK (TO-252) type C3 mechanical data

Dim.	mm		
	Min.	Typ.	Max.
A	2.20	2.30	2.38
A1	0.00		0.10
A2	0.90	1.01	1.10
b	0.72		0.85
b2	0.72		1.10
b3	5.13	5.33	5.46
c	0.47		0.60
c2	0.47		0.60
D	6.00	6.10	6.20
D1	5.20	5.45	5.70
E	6.50	6.60	6.70
E1	5.00	5.20	5.40
e	2.186	2.286	2.386
H	9.80	10.10	10.40
L	1.40	1.50	1.70
L1	2.90 REF		
L2	0.51 BSC		
L3	0.90		1.25
L4	0.60	0.80	1.00
L5	0.15		0.75
L6	1.80 REF		
θ	0°		8°
θ1	5°	7°	9°
θ2	5°	7°	9°

Figure 20. DPAK (TO-252) recommended footprint (dimensions are in mm)

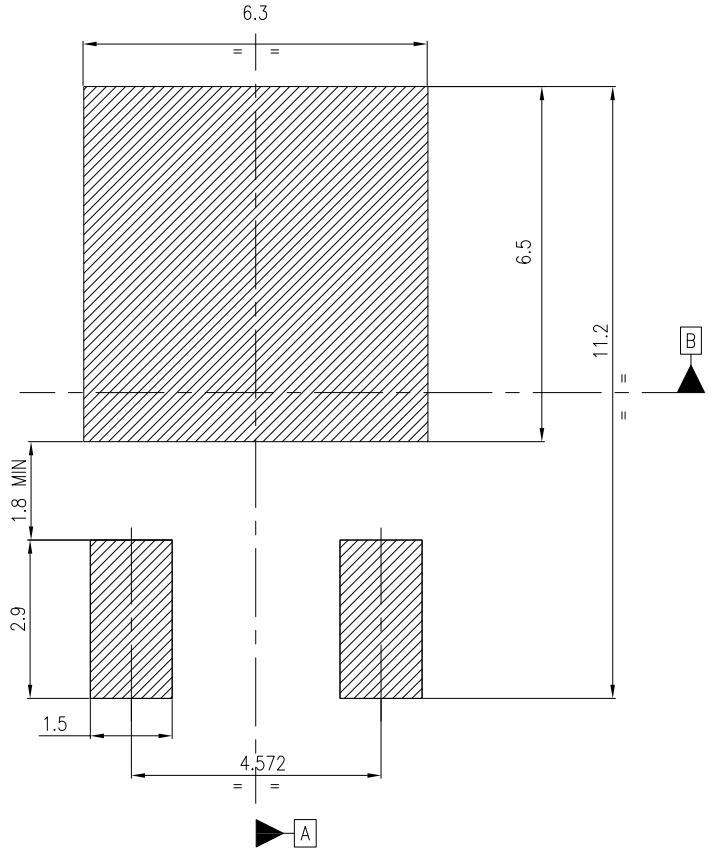

Notes:

1) This footprint is able to ensure insulation up to 630 Vrms (according to CEI IEC 664–1)

2) The device must be positioned within ⊕ 0.05 A B

FP_0068772_34

4.3 DPAK (TO-252) packing information

Figure 21. DPAK (TO-252) tape outline

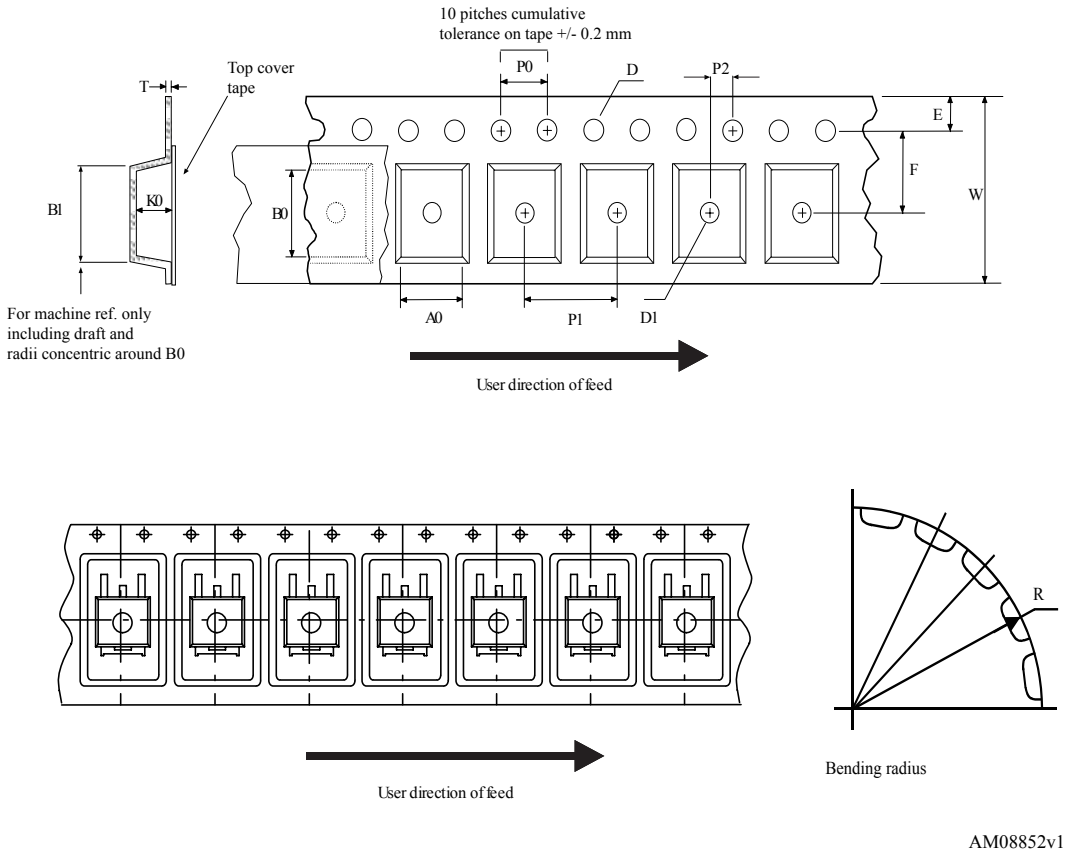

Figure 22. DPAK (TO-252) reel outline

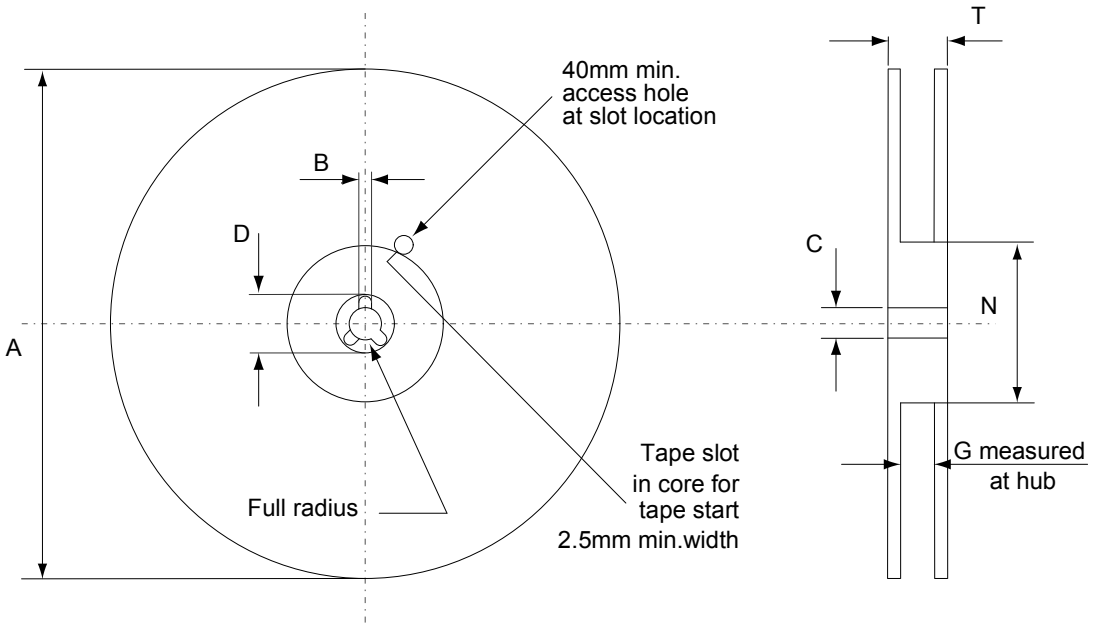

AM06038v1

Table 10. DPAK (TO-252) tape and reel mechanical data

Tape			Reel		
Dim.	mm		Dim.	mm	
	Min.	Max.		Min.	Max.
A0	6.8	7	A		330
B0	10.4	10.6	B	1.5	
B1		12.1	C	12.8	13.2
D	1.5	1.6	D	20.2	
D1	1.5		G	16.4	18.4
E	1.65	1.85	N	50	
F	7.4	7.6	T		22.4
K0	2.55	2.75			
P0	3.9	4.1	Base qty.		2500
P1	7.9	8.1	Bulk qty.		2500
P2	1.9	2.1			
R	40				
T	0.25	0.35			
W	15.7	16.3			

Revision history

Table 11. Document revision history

Date	Revision	Changes
22-Sep-2006	1	First release.
09-Oct-2007	2	Added new section: *Electrical characteristics (curves)*.
02-Oct-2009	3	Corrected marking and description on first page.
20-Aug-2018	4	Updated Section 4 Package information. Minor text changes.
25-May-2023	5	The part numbers STD7NM80-1, STF7NM80 and STP7NM80 have been moved to a separate datasheet and the document has been updated accordingly. Updated title and Description on cover page. Updated Section 4.1 DPAK (TO-252) type A2 package information and added Section 4.2 DPAK (TO-252) type C3 package information. Minor text changes.

Contents

1 Electrical ratings 2

2 Electrical characteristics 3

2.1 Electrical characteristics (curves) 5

3 Test circuits 7

4 Package information 8

4.1 DPAK (TO-252) type A2 package information 8

4.2 DPAK (TO-252) type C3 package information 10

4.3 DPAK (TO-252) packing information 13

Revision history 15

IMPORTANT NOTICE – READ CAREFULLY

STMicroelectronics NV and its subsidiaries (“ST”) reserve the right to make changes, corrections, enhancements, modifications, and improvements to ST products and/or to this document at any time without notice. Purchasers should obtain the latest relevant information on ST products before placing orders. ST products are sold pursuant to ST’s terms and conditions of sale in place at the time of order acknowledgment.

Purchasers are solely responsible for the choice, selection, and use of ST products and ST assumes no liability for application assistance or the design of purchasers’ products.

No license, express or implied, to any intellectual property right is granted by ST herein.

Resale of ST products with provisions different from the information set forth herein shall void any warranty granted by ST for such product.

ST and the ST logo are trademarks of ST. For additional information about ST trademarks, refer to www.st.com/trademarks. All other product or service names are the property of their respective owners.

Information in this document supersedes and replaces information previously supplied in any prior versions of this document.

© 2023 STMicroelectronics – All rights reserved