THIS DRAWING IS UNPUBLISHED. RELEASED FOR PUBLICATION: -/-/-
© COPYRIGHT - - 20 YR(S) ELECTRONICS CORPORATION. ALL RIGHTS RESERVED.

REV	DIST	REVISIONS					
AA	22	P	CN	DESCRIPTION	DATE	DR	APVD
		C		PER ECO-06-029079	04SEP2006	RQ	TX

MECHANICAL:

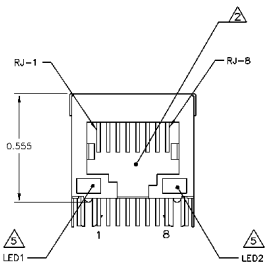

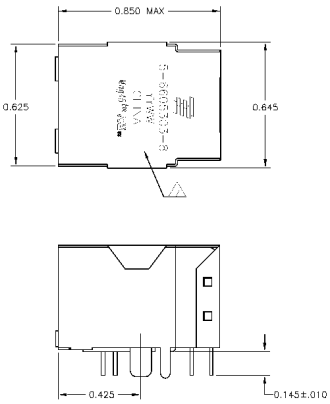

315 SERIES MAGNETIC CIRCUIT 3 6

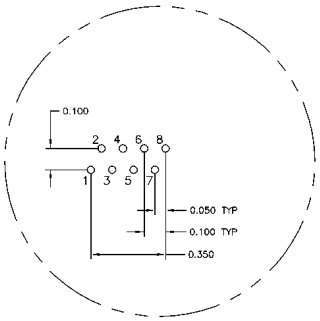

Pin Designations

NOTES:

1. MATERIALS
HOUSING - THERMOPLASTIC PET POLYESTER FLAMMABILITY RATING UL 94V-0
SHIELD - STEEL (076330) BRASS PER PLATE HOWEVER 50µIN (1.3µM) MINIMUM NICKEL SOLDER TAIL POST DIPPED WITH 100µIN MINIMUM SAC SOLDER.
MODULAR CONTACT - 0.0197 X 0.0118" PHOSPHOR BRONZE, 50µIN (1.3µM) OVER 100µIN NICKEL UNDERPLATE, WITH SELECT 50µIN MINIMUM GOLD FINISH PLATE SOLDER TAILS WITH 100µIN MINIMUM TIN MINIMUM SAC SOLDER DIP.
LED INTERNAL DIODE LENS - DIFFUSED EPOXY LENS, (.220") X (.220") CATHODE STEEL SURFACE MOUNT LEADS PRE-PLATED WITH 50µIN (1.3µM) STRIKE OVER 100µIN (2.5µM) UNDERPLATE OVER 100µIN (2.5µM) COPPER UNDERPLATE POST PLATED WITH 100µIN (2.5µM) MINIMUM TIN MINIMUM SAC SOLDER DIP OR POST DIPPED IN SOLDER DIP.

2. RJ45 JACK CAVITY CONFORMS TO FCC RULES AND REGULATIONS PART 68, SUBPART F.

3. MAGNETICS
- IMPEDANCE: 100 OHMS
- TURNS RATIO: 1CT:1CT (PAIR 1-2 : 3-6 : 4-5 : 7-8)
- OPEN CIRCUIT INDUCTANCE: 350µH MIN. (@ 8MHz, 0.1VRMS, 8mADC BIAS FROM 0°C TO 70°C, TX AND RX)
PERFORMANCE @ 25°C
INSERTION LOSS (IL): 1.0 MAX FROM 0.1MHz TO 100MHz
RETURN LOSS (RL): 18 MIN. (FROM 0.5MHz TO 30MHz)
18-20.0LOG(F/30) MIN. FROM 30MHz TO 60MHz
12.0 MIN. FROM 60MHz TO 80MHz
CROSSTALK: -40.0 MIN. FROM 0.5MHz TO 45MHz
-30.0-20LOG(F/60) MIN. FROM 45MHz TO 80MHz
COMMON MODE REJECTION (CMR): 30.0 MIN. FROM 0.5MHz TO 100MHz
- SOLDERING CONDITIONS: 260°C FOR 10 SECONDS (PER IPC/JEDEC J-STD-020C)

4. OPERATING TEMPERATURE RANGE: 0°C TO +70°C.

5. LEDS ARE DRIVEN WITH CONSTANT CURRENT AT APPROX 20mA
LED COLOR: DOMINANT WAVELENGTH (NM): GREEN 568 nm TYP @ IF=20mA
FORWARD VOLTAGE (VF): GREEN 2.2V TYP @ IF=20mA
DOMINANT WAVELENGTH (NM): YELLOW 588 nm TYP @ IF=20mA
FORWARD VOLTAGE (VF): YELLOW 2.1V TYP @ IF=20mA

6. INDICATOR CONFIGURATIONS ARE FOR SINGLE CONFIGURATION. THE MAGNETICS ARE SYMMETRICAL AND SUPPORT AUTO MDI/MDIX.

7. YCO PRODUCTIONS: DATE, PART NUMBER, DATE CODE, COUNTRY OF ORIGIN AND AGENCY APPROVAL MARKING IN APPROXIMATE LOCATIONS ICONS.

8. THE PART IS A LOW-WIND, DIP WAVE SOLDERING PROCESS.
PREHEAT TEMPERATURE IS 120°C TO 160°C, 120 SECONDS TO 180 SECONDS
PEAK SOLDERING TEMPERATURE IS 260°C MAX, 10 SECONDS MAX

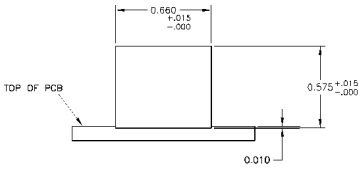

Suggested Panel Cutout

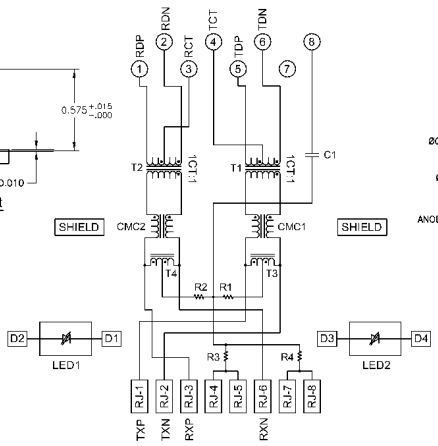

C1=1000pF, 2kV CAPACITOR
R1-R4 = 75 OHMS, 1/16 W RESISTORS

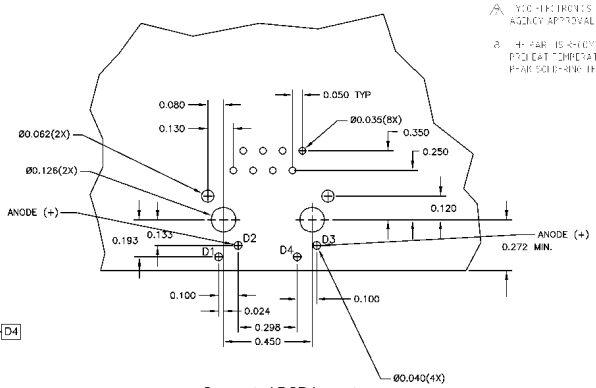

Suggested PCB Layout
(Component Side)

YES	GREEN	YELLOW	5-6605303-8
2KV DECOUPLING CAPACITOR	LED1	LED2	PART NUMBER

THIS DRAWING IS A CONTROLLED DOCUMENT.

DR: G. ATTADIA — 04MAR2005	Tyco Electronics	Tyco Electronics Corporation Changzhou, China
CHK: D. FARDLE — 04MAR2005		
APVD: D. FARDLE — 04MAR2005		
PRODUCT SPEC: 108-2100		1X1 MAG45(TM), 4N2 SCHEMATIC(10/100 ETHERNET), 315 SERIES CIRCUIT, DECOUPLING CAPACITOR, WITH LEDS, NO PANEL GROUND TABS
APPLICATION SPEC: —	SIZE A1	DOC CODE 00779	DRAWING NO C-6605303	REGISTERED TO —
WEIGHT: —	CUSTOMER DRAWING	SCALE 1:1	SHEET 1 OF 1	REV C