LOADING PATTERN MATING SIDE

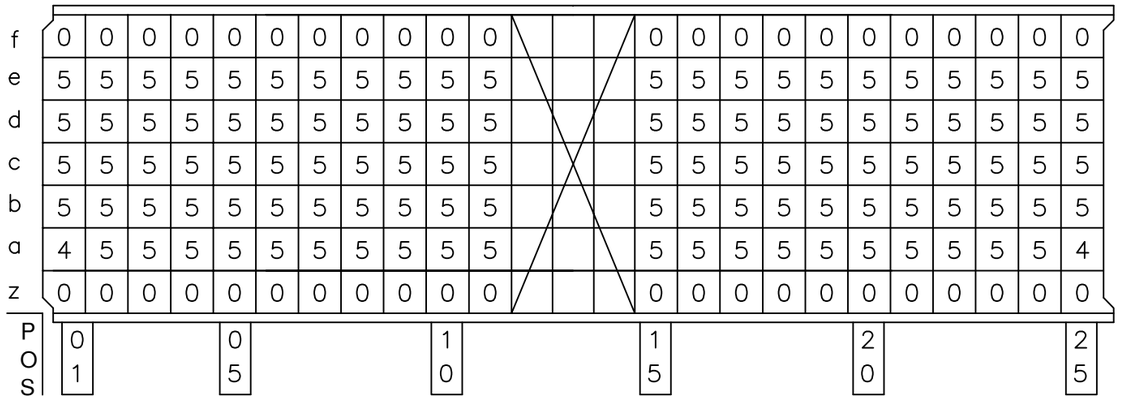

LOADED CONNECTOR ASSEMBLY
(FOR EXAMPLE)

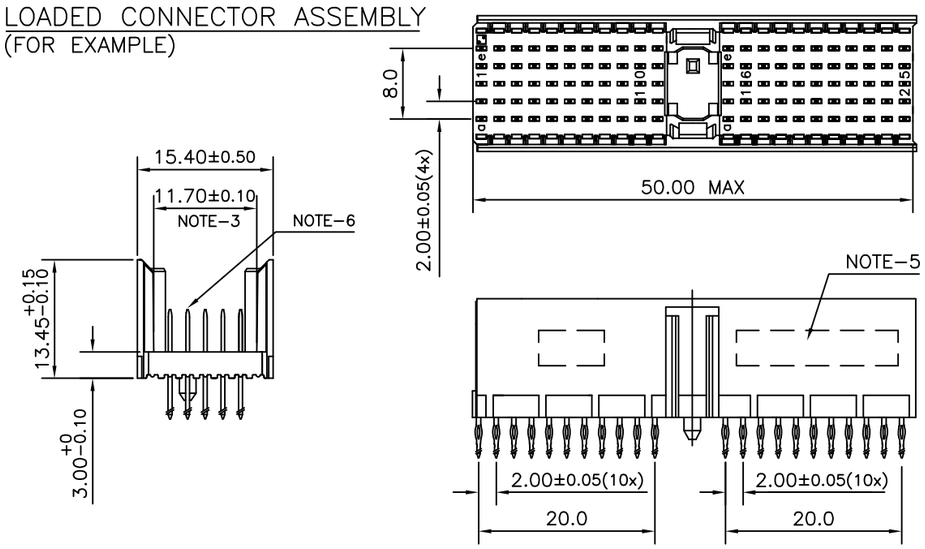

CONTACT OVERVIEW

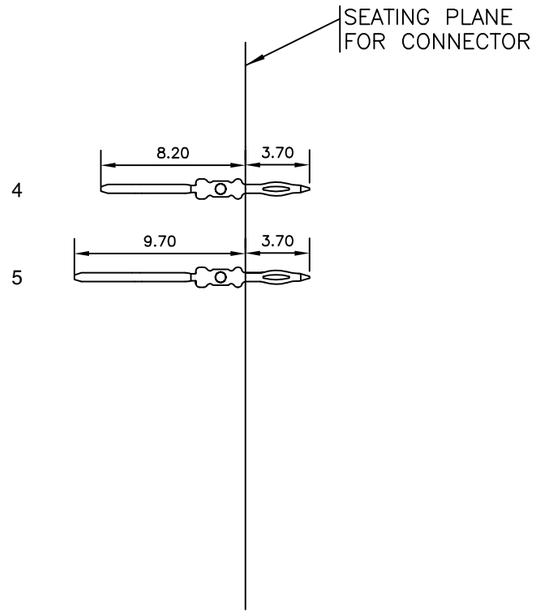

LAY-OUT P.C.B.-HOLE

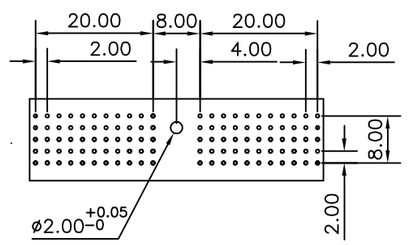

HM2P07PD51M0----

LEAD FREE INDICATOR : LF = LEAD FREE
(DIGIT 15 & 16)

PLATING CODE (DIGIT 13 AND 14)
(REF DRW NO. BS,C , 201844 , 003)

NOTES

1. THIS PRODUCT IS CSA APPROVED.
2. THIS PRODUCT IS UL RECOGNIZED.
3. MEASURED AT THE BOTTOM.
4. MATERIAL CONTACT: PHOSPHORBRONZE
   HOUSING: CREAM WHITE GLASS FILLED POLYESTER UL-94V0
5. CONNECTOR PRINTED WITH P/N AND DATE CODE.
6. FOR ACTUAL CONTACT LOADINGS, SEE LOADING PATTERN MATING SIDE.
7. SHAPE OF CONNECTOR HOUSING CAN ALTER DEPENDING ON PRODUCTION LOCATION
8. THE PRODUCT (LF) MEETS EUROPEAN UNION DIRECTIVES AND OTHER COUNTRY REGULATIONS AS DESCRIBED IN GS-22-008
9. FOR RECOMMENDED PTH DIMENSIONS REFER DRAWING : BS, A , 201572 , 001

CATALOG NO: HM2P07PD51M0----

mat'l. code SEE NOTE – 4				surface ISO 1302		tolerance ISO 406 ISO 1101	projection	product family MILLIPACS
ltr	ecn no	dr	date	tolerances unless otherwise specified				title
A	I06-0072	MINI	08/06/2006	angles	linear	.0±0.2	mm	MILLIPACS 5+2R STR HDR PF CONN TYPE A
						.00±0.1		
				0°±1°		.000±.00x	scale –	
				dr	MINI K VANDANATH	08/06/2006		dwg no BS, C , 203028, 708 — sheet 1 of 1 — size A3
				engr	BIJU K PAUL	08/06/2006		
				chr	BIJU K PAUL	08/06/2006		
				appd	K V SIVADAS	05/05/2006		type Product Customer Drawing
sheet index	revision	A						
	sheet	1						

FCIconnect.com
Copyright FCI
form A3

PDM: Rev:A STATUS:Released Printed: Dec 04, 2007