DWG. NO. SD-50837-002

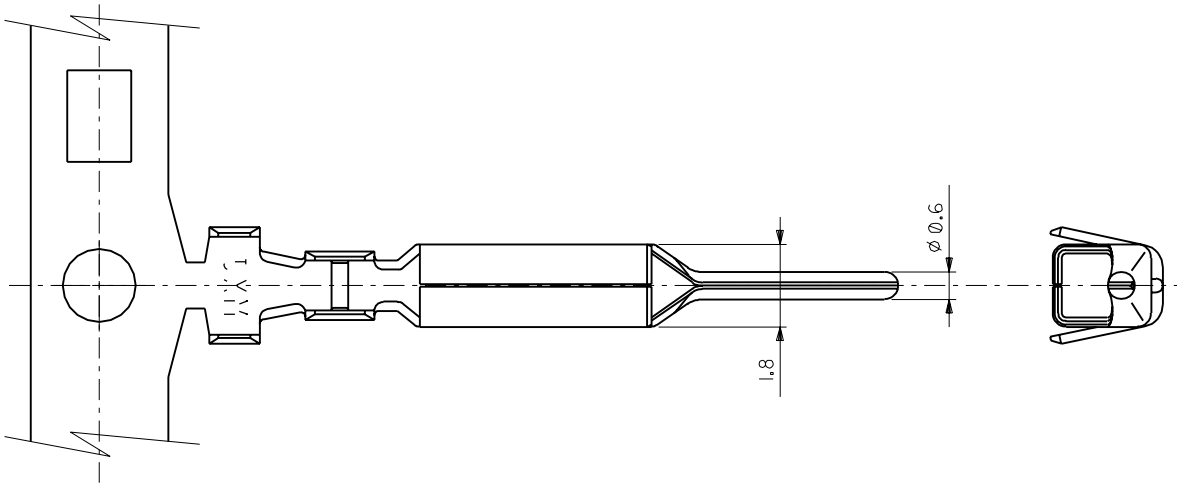


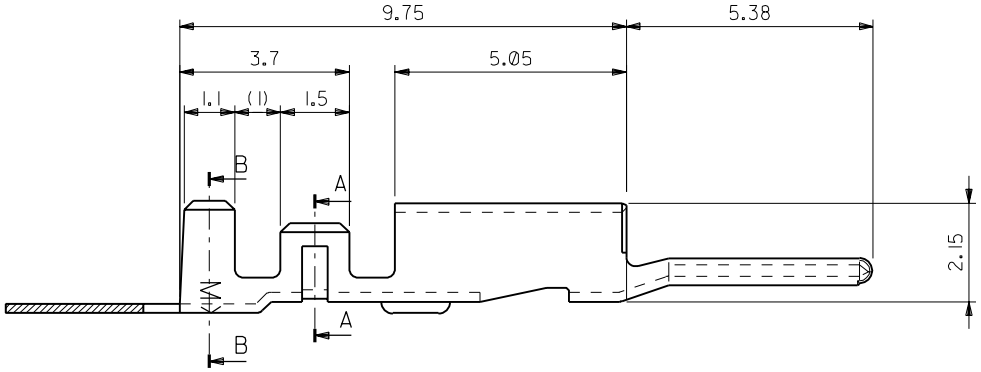


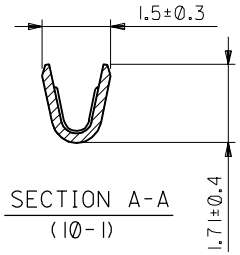


SECTION A-A
(10-1)

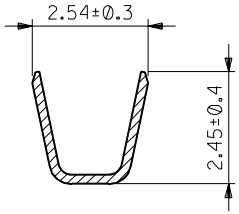


SECTION B-B
(10-1)

注記
NOTE.

1.適合ハウジング :51198-**00
APPLICABLE HOUSING

| | |
|---|---|
| 50837-8100 | バラ状 LOOSE |
| 50837-8000 | 連鎖状 CHAIN |
| 製品番号 MATERIAL NO. | 端子形状 FORM |

DIMENSIONS: ☐ mm/INCH ☐ INCH/mm ☒ mm ONLY | SHT | REV | REVISE ON CAD ONLY

DO NOT SCALE DRAWING

EC NO. DRWN: CH'K: APPR:
EC NO. DRWN: CH'K: APPR:
EC NO. DRWN: CH'K: APPR:
EC NO. DRWN: CH'K: APPR:

新規作成 PROPOSED
EC NO. JD90189
DRWN: M.YAGI '98/08/05
CH'K: Y.ITO
APPR: H.IKESUGI

REV: 0

DESCRIPTION

MATERIAL 材料 りん青銅、スズメッキ (t=0.2)
PRE-TINNED PHOSPHOR BRONZE (t=0.2)

FINISH 仕上げ

WIRE RANGE 適用電線範囲 AWG #22-#28

INS. RANGE 被覆外径 ø1.15- ø1.8

GENERAL TOLERANCES: (UNLESS SPECIFIED) 一般公差

| | | |
|---|---|---|
| 10 UNDER 未満 | | ±0.2 |
| 10 OVER 以上 | 30 UNDER 未満 | ±0.25 |
| 30 OVER 以上 | | ±0.3 |
| ANGLE 角度 | | ±3° |

SCALE 10-1 | DESIGN UNITS ☒mm ☐INCH | THIRD ANGLE PROJECTION

DRAWN BY & DATE '98/05/14
CHECKED BY & DATE
APPROVED BY & DATE
CAD FILENAME 50837002.S01

TITLE: 2.5 WIRE TO BOARD CONN. CRIMP PIN

molex MOLEX INCORPORATED

MATERIAL NO. SEE CHART | DRAWING NO. SD-50837-002 | SHEET NO. 1 OF 1

THIS DRAWING CONTAINS INFORMATION THAT IS PROPRIETARY TO MOLEX INCORPORATED AND SHOULD NOT BE USED WITHOUT WRITTEN PERMISSION.

SIZE B

50837002.S01

EN-02J(097) MXJ-54