THIS DRAWING IS UNPUBLISHED. RELEASED FOR PUBLICATION
© COPYRIGHT 2011 BY TYCO ELECTRONICS CORPORATION. ALL RIGHTS RESERVED.

| LOC | DIST |
|---|---|
| DW | — |

REVISIONS

| P | LTR | DESCRIPTION | DATE | DWN | APVD |
|---|---|---|---|---|---|
| | C | (ECR-10-024779, IMPROVE 2041003-1 HSG STRUCTURE AND ADD PN 1-2041003-1) | 11JAN'11 | E.L. | W.K. |

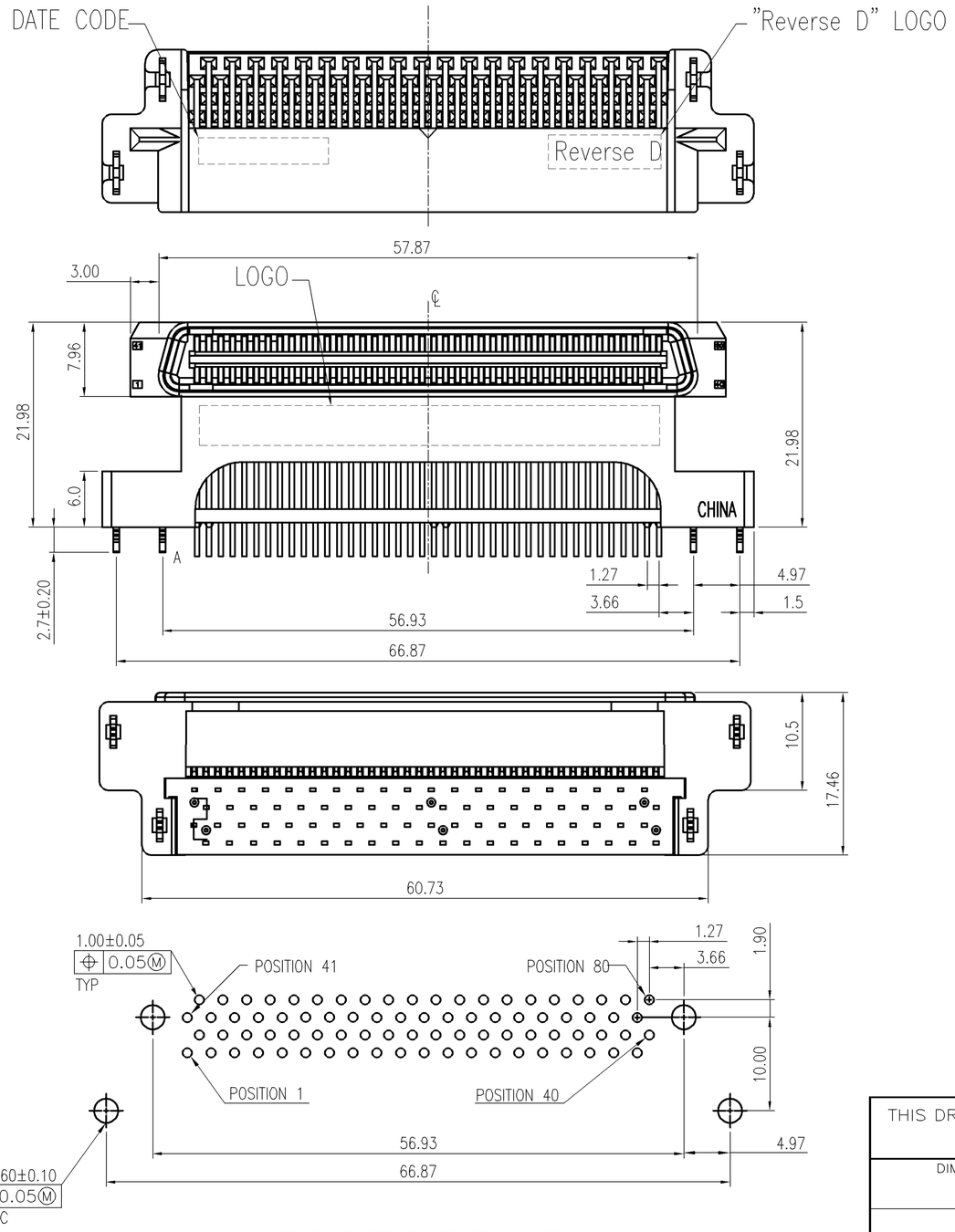


RECOMMENDED PC BOARD LAYOUT
VIEWED FROM CONNECTOR SIDE

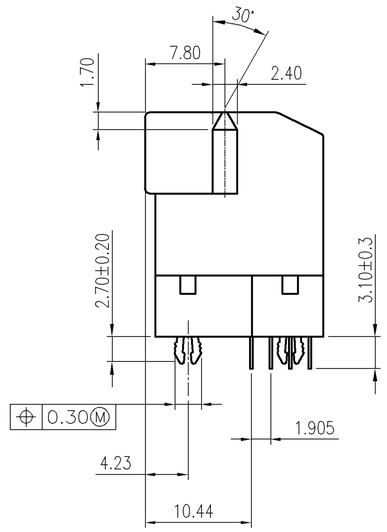


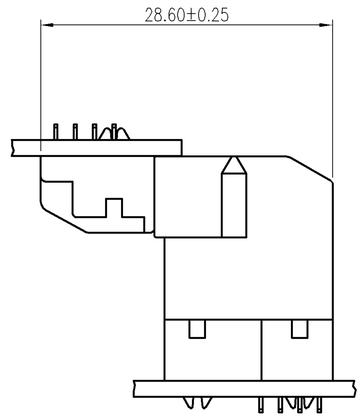


RIGHT ANGLE PLUG ASSEMBLY MATED
WITH RIGHT ANGLE RECEPTACLE ASSEMBLY

NOTE:

1. MATERIAL:
   HOUSING: LCP, UL 94V-0, COLOR: BLACK.
   CONTACT: PHOSPHOR BRONZE, THICKNESS=0.30mm.
   RETENTION LEGS: BRASS, THICKNESS=0.50mm.
2. FINISH:
   CONTACT: GOLD FLASH OVER
   0.762um [30u"] MIN. PALLADIUM-NICKEL PLATED ON CONTACT AREA,
   3.8um [150u"] MIN. MATTE TIN PLATED ON SOLDER TAILS,
   1.27um [50u"] MIN. NICKEL UNDERPLATED ALL OVER.
   RETENTION LEGS: 3.8um [150u"] MIN. TIN-CU PLATED OVER
   1.27um [50u"] MIN. NICKEL PLATED.
3. AIWAYS RoHS/ELV COMPLIANT
4. WAVE SOLDER CAPABLE TO 265°C PER TE SPEC 109-202, CONDITION B.

| REVERSED | 1734375-1 |
|---|---|
| INTERFACE | PART NUMBER |

THIS DRAWING IS A CONTROLLED DOCUMENT.

DIMENSIONS: mm

TOLERANCES UNLESS OTHERWISE SPECIFIED:

| | |
|---|---|
| 0 PLC | ± 0.38 |
| 1 PLC | ± 0.25 |
| 2 PLC | ± 0.13 |
| 3 PLC | ± 0.05 |
| 4 PLC | ± – |
| ANGLES | ± 3° |

MATERIAL: SEE NOTE

FINISH: SEE NOTE

| | | |
|---|---|---|
| DWN | O. HU | 24OCT2006 |
| CHK | S. HOU | 24OCT2006 |
| APVD | W.J. KE | 24OCT2006 |
| PRODUCT SPEC | 108-57876 | |
| APPLICATION SPEC | — | |
| WEIGHT | — | |

TE Connectivity

NAME: CHAMP 1.27, SERIES I, PLUG, ASS'Y, R/A, EXTENDED HEIGHT

| SIZE | CAGE CODE | DRAWING NO | RESTRICTED TO |
|---|---|---|---|
| A3 | 00779 | C-1734375 | — |

CUSTOMER DRAWING | SCALE — | SHEET 1 OF 3 | REV C

1470-19 (1/08)

THIS DRAWING IS UNPUBLISHED. RELEASED FOR PUBLICATION
© COPYRIGHT 2011 BY TYCO ELECTRONICS CORPORATION. ALL RIGHTS RESERVED.

| LOC | DIST |
|---|---|
| DW | — |

REVISIONS

| P | LTR | DESCRIPTION | DATE | DWN | APVD |
|---|---|---|---|---|---|
| | | SEE SHEET 1. | | | |

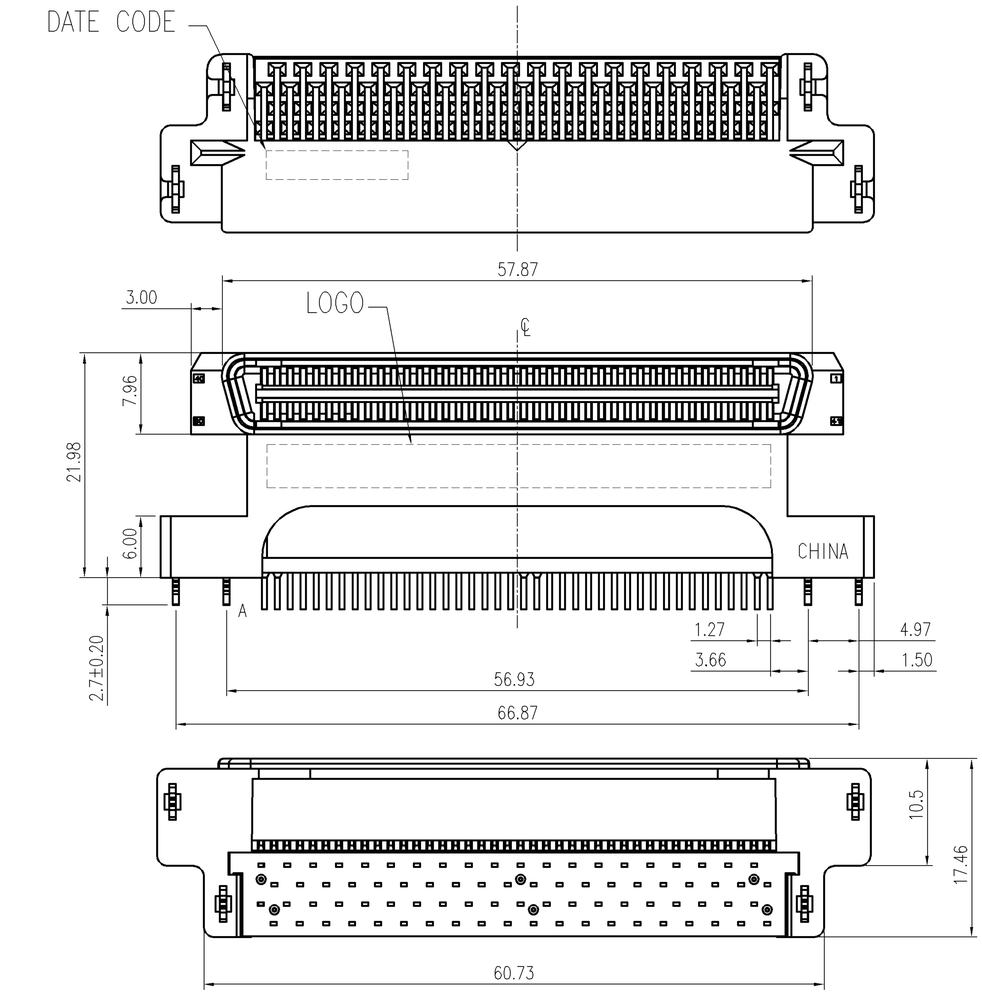


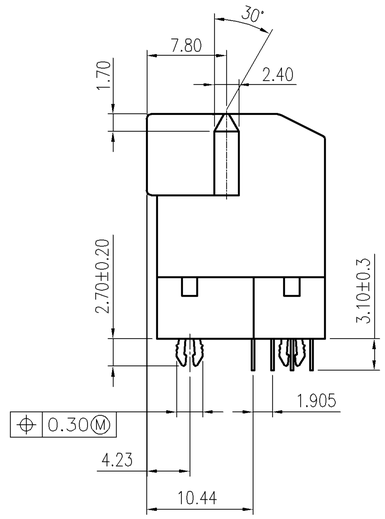


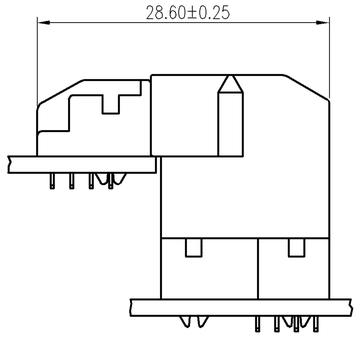


RIGHT ANGLE PLUG ASSEMBLY MATED
WITH RIGHT ANGLE RECEPTACLE ASSEMBLY

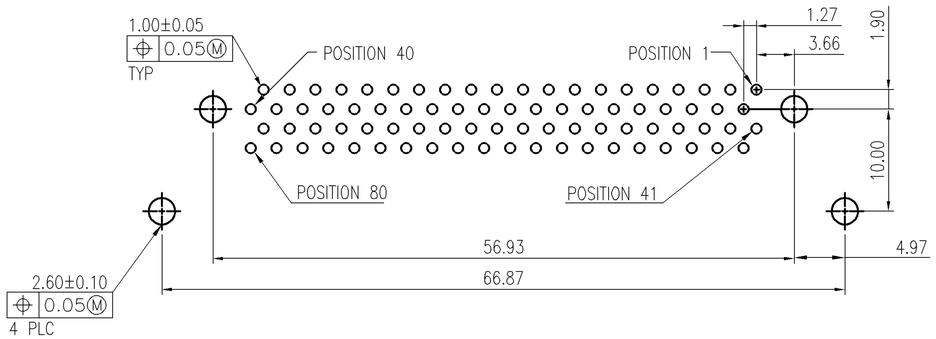


RECOMMENDED PC BOARD LAYOUT
VIEWED FROM CONNECTOR SIDE

| NORMAL | 1-1734375-1 |
|---|---|
| INTERFACE | PART NUMBER |

THIS DRAWING IS A CONTROLLED DOCUMENT.

DIMENSIONS: mm

TOLERANCES UNLESS OTHERWISE SPECIFIED:

| | |
|---|---|
| 0 PLC | ± 0.38 |
| 1 PLC | ± 0.25 |
| 2 PLC | ± 0.13 |
| 3 PLC | ± 0.05 |
| 4 PLC | ± – |
| ANGLES | ± 3° |

MATERIAL –

FINISH –

DWN –
CHK –
APVD –
PRODUCT SPEC –
APPLICATION SPEC –
WEIGHT –

TE Connectivity

NAME
CHAMP 1.27, SERIES I, PLUG,
ASS'Y, R/A, EXTENDED HEIGHT

| SIZE | CAGE CODE | DRAWING NO | RESTRICTED TO |
|---|---|---|---|
| A3 | 00779 | C-1734375 | — |

CUSTOMER DRAWING | SCALE — | SHEET 2 OF 3 | REV C

THIS DRAWING IS UNPUBLISHED. RELEASED FOR PUBLICATION
© COPYRIGHT 2011 BY TYCO ELECTRONICS CORPORATION. ALL RIGHTS RESERVED.

| LOC | DIST |
|---|---|
| DW | — |

REVISIONS

| P | LTR | DESCRIPTION | DATE | DWN | APVD |
|---|---|---|---|---|---|
| | | SEE SHEET 1. | | | |

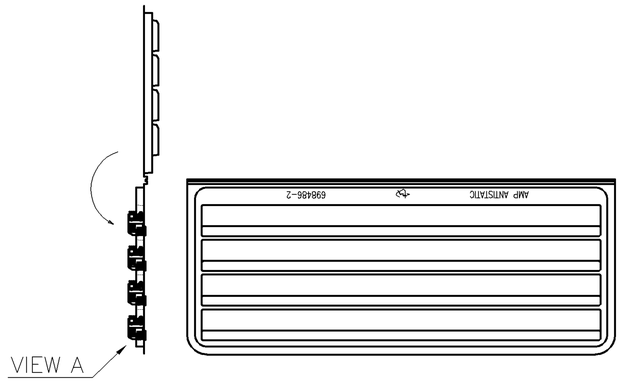


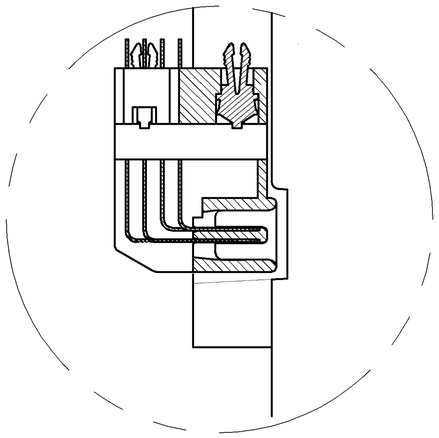

VIEW A

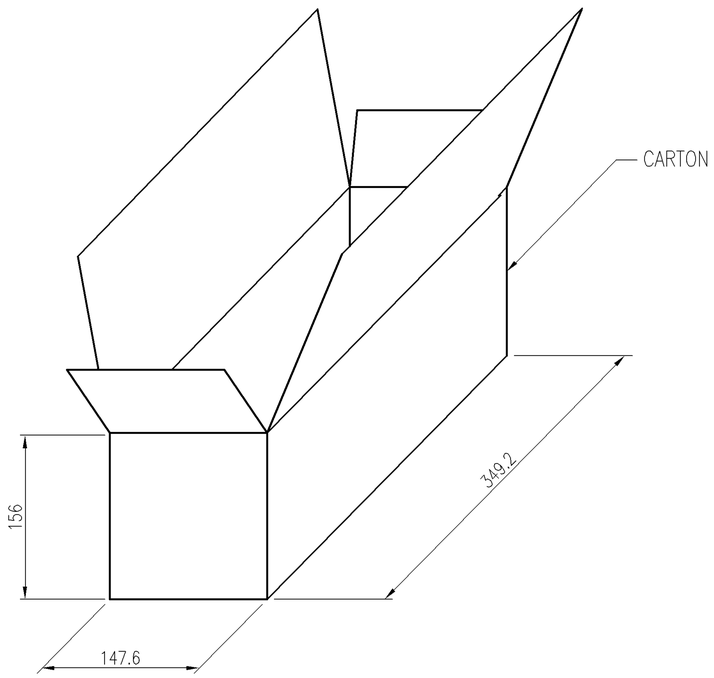


| 2.46 | 1.46 | 128 | 8 | 16 | 1–1734375–1 |
|---|---|---|---|---|---|
| | | | | | 1734375–1 |
| G.W(KGS) | N.W(KGS) | PACKAGING QUANTITY/BOX | TRAY/BOX | PCS/TRAY | PART NUMBER |

THIS DRAWING IS A CONTROLLED DOCUMENT.

DIMENSIONS: mm

TOLERANCES UNLESS OTHERWISE SPECIFIED:

| | |
|---|---|
| 0 PLC | ± – |
| 1 PLC | ± – |
| 2 PLC | ± – |
| 3 PLC | ± – |
| 4 PLC | ± – |
| ANGLES | ± – |

MATERIAL –

FINISH –

DWN –
CHK –
APVD –
PRODUCT SPEC –
APPLICATION SPEC –
WEIGHT –

TE Connectivity

NAME

CHAMP 1.27, SERIES I, PLUG, ASS'Y, R/A, EXTENDED HEIGHT

| SIZE | CAGE CODE | DRAWING NO | RESTRICTED TO |
|---|---|---|---|
| A3 | 00779 | C–1734375 | — |

CUSTOMER DRAWING

SCALE — SHEET 3 OF 3 REV C