THIS DRAWING CONTAINS INFORMATION THAT IS PROPRIETARY TO J.S.T. AND SHALL NOT BE USED OR SHOWN WITHOUT WRITTEN PERMISSION.

ITEM	CONNECTOR PART NO.	DESCRIPTION	IPI CHECK	EOR CHECK	Applicable Tooling
1	RSFP-LP-1V-250	RSF CONNECTOR HOUSING			APPLICATOR
2	SRSF-61T-250A	RSF CONTACT – BRASS, TIN-PLATED			
3	UL1015, 16 AWG	BLACK			

SUGGESTED MATING TAB

NO SCALE

	WITHOUT STABILIZER	WITH STABILIZER
DIM. "A"	2.20 [0.087] MIN.	4.20±0.15 [0.165±0.006]
DIM. "B"	7.40 [0.291] MIN.	7.98 [0.314] MIN.
DIM. "C"	5.90 [0.232] MAX.	(7.6)

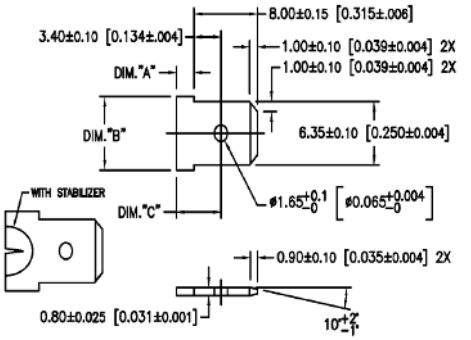

MATING TAB NOTES:
4. MAT'L: BRASS.
FINISH: SUGGESTED NO PLATING.

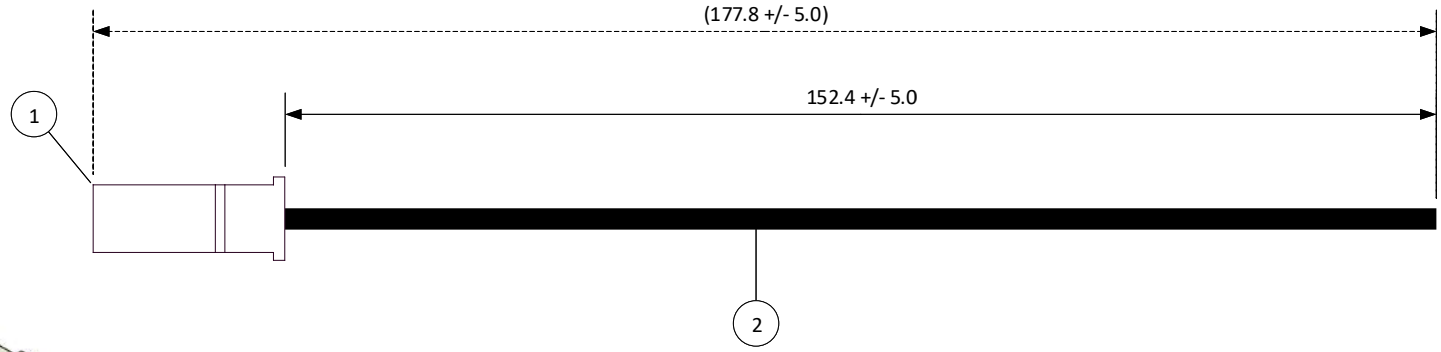

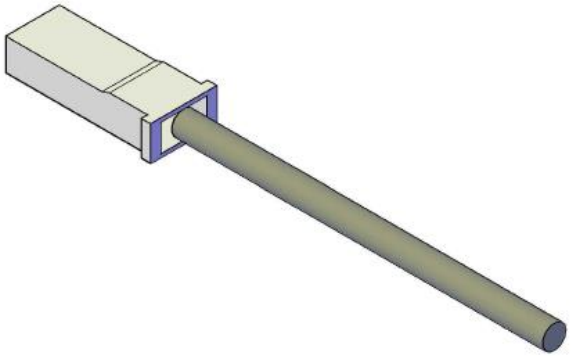

SCALE	CUSTOMER NAME	CUSTOMER PART NO.
1: 1		
DIMENSIONS	DESCRIPTION	
All dimensions are in MM with a tolerance of +/- 3.0 unless otherwise specified.	6" INSIDE LENGTH – 1 POSITION, LIF, POS LOCK, .250, SINGLE-END INSULATED ASSY, BRASS TIN-PLATED, BLUNT LEAD, F	
DRAWN BY	ASSEMBLY PART NO.	
STEVEN PILKINGTON	A01RSFP16K152B	
CHECKED BY	DRAWING NO. & REVISION	REVISED
JUSTIN BAKER	GAM-107	3/10/2016

REV.	DESCRIPTION	DATE	BY