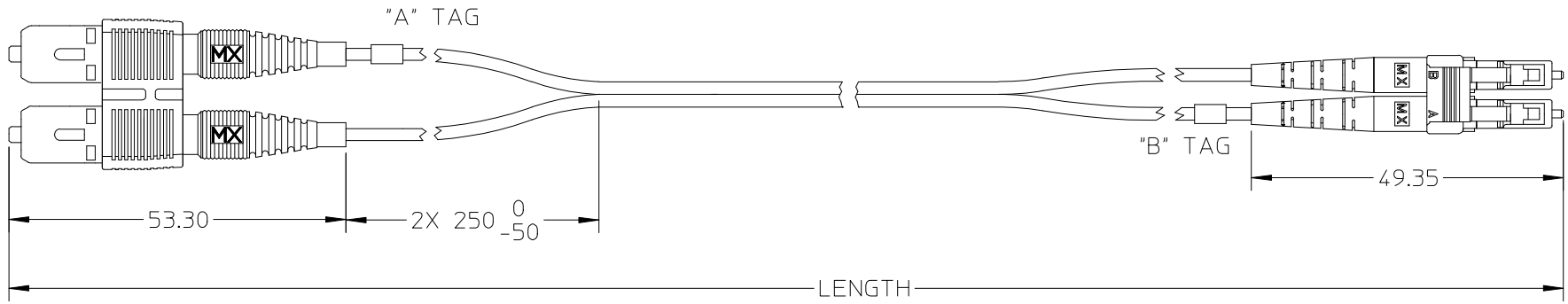

MX P/N	DESCRIPTION	LENGTH
885236724	SC-LC DUP MM 62.5/125 2MM 25M	25000(+200/-0)
885236723	SC-LC DUP MM 62.5/125 2MM 2.5M	2500(+200/-0)
885236705	SC-LC DUP MM 62.5/125 2MM 6M	6000(+200/-0)
885236704	SC-LC DUP MM 62.5/125 2MM 5M	5000(+200/-0)
885236703	SC-LC DUP MM 62.5/125 2MM 10M	10000(+200/-0)
885236702	SC-LC DUP MM 62.5/125 2MM 3M	3000(+200/-0)
885236701	SC-LC DUP MM 62.5/125 2MM 2M	2000(+200/-0)
885236700	SC-LC DUP MM 62.5/125 2MM 1M	1000(+100/-0)

NOTES:

1. DUST CAPS ARE NOT SHOWN
2. PER CHANNEL @ 850nm
   IL<=0.5dB

ENTER DESCRIPTION
EC NO: DG2009-0118 2009/06/06
DRWN:XPCHEN 2009/06/06
CH'KD: 2009/06/08
APPR: JOWANG
DESCRIPTION
C
REV

QUALITY SYMBOLS
▼=0
Ⓒ=0

GENERAL TOLERANCES (UNLESS SPECIFIED)

	mm	INCH
4 PLACES	± ---	± ---
3 PLACES	± ---	± ---
2 PLACES	± ---	± ---
1 PLACE	± ---	± ---
ANGULAR ±---°		

DRAFT WHERE APPLICABLE MUST REMAIN WITHIN DIMENSIONS

DIMENSION STYLE: MM ONLY
SCALE: ---
DESIGN UNITS: METRIC
THIRD ANGLE PROJECTION

DRAWN BY: XP DATE: 2008/06/20
CHECKED BY: LISA DATE: 2008/06/20
APPROVED BY: JOHNNY DATE: 2008/06/20

TITLE: SC-LC DUP MM 62.5 2MM

molex MOLEX INCORPORATED

MATERIAL NO.: SEE TABLE
DOCUMENT NO.: SD-88523-064
SHEET NO.: 1 OF 1
SIZE: A4

THIS DRAWING CONTAINS INFORMATION THAT IS PROPRIETARY TO MOLEX INCORPORATED AND SHOULD NOT BE USED WITHOUT WRITTEN PERMISSION