THIS DRAWING CONTAINS INFORMATION THAT IS PROPRIETARY TO J.S.T. AND SHALL NOT BE USED OR SHOWN WITHOUT WRITTEN PERMISSION.

ITEM	CONNECTOR PART NO.	DESCRIPTION	IPI CHECK	EOR CHECK	Applicable Tooling
1	SVM-61T-P2.0	VL CONNECTOR - MALE CONTACT			APPLICATOR
2	SVF-61T-P2.0	VL CONNECTOR - FEMALE CONTACT			
3	UL1015, 14 AWG	BLACK			

Applicable Housings

NO. OF CIRCUITS	HOUSING PART NO. WITH PANEL LOCKS - FOR MALE CONTACT	HOUSING PART NO. WITHOUT PANEL LOCKS - FOR MALE CONTACT	HOUSING PART NO. INNER LOCKS - FOR FEMALE CONTACT	HOUSING PART NO. OUTER LOCKS - FOR FEMALE CONTACT
1	-	VLR-01VF	VLP-01V	VLP-01V-1
2	VLR-02V	VLR-02VF	VLP-02V	VLP-02V-1
3	VLR-03V	-	VLP-03V	VLP-03V-1
4	VLR-04V	VLR-04VF	VLP-04V	VLP-04V-1
4	VLR-04VN	-	-	VLP-04VN-1
6	VLR-06V	-	VLP-06V	VLP-06V-1
8	VLR-08V	-	VLP-08V	VLP-08V-1
12	VLR-12V	-	VLP-12V	VLP-12V-1

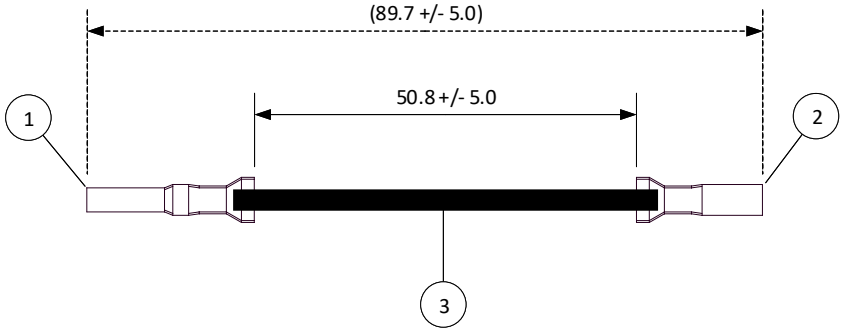

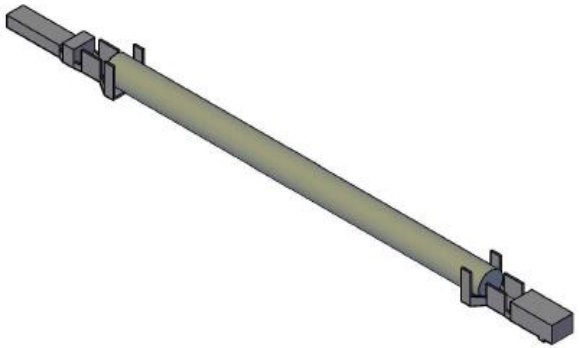

REV.	DESCRIPTION	DATE	BY

SCALE 1: 1	CUSTOMER NAME	CUSTOMER PART NO.
DIMENSIONS All dimensions are in MM with a tolerance of +/- 3.0 unless otherwise specified.	DESCRIPTION 6.2 mm Pitch VL Series Standard Leads - 2" Inside Length DOUBLE-END LEADS, M-F	
DRAWN BY STEVEN PILKINGTON	ASSEMBLY PART NO. ASVMSVF14K51	
CHECKED BY JUSTIN BAKER	DRAWING NO. & REVISION GAM-100	REVISED 3/10/2016