DIMENSIONS IN mm. --DO NOT SCALE PRINT

C130522

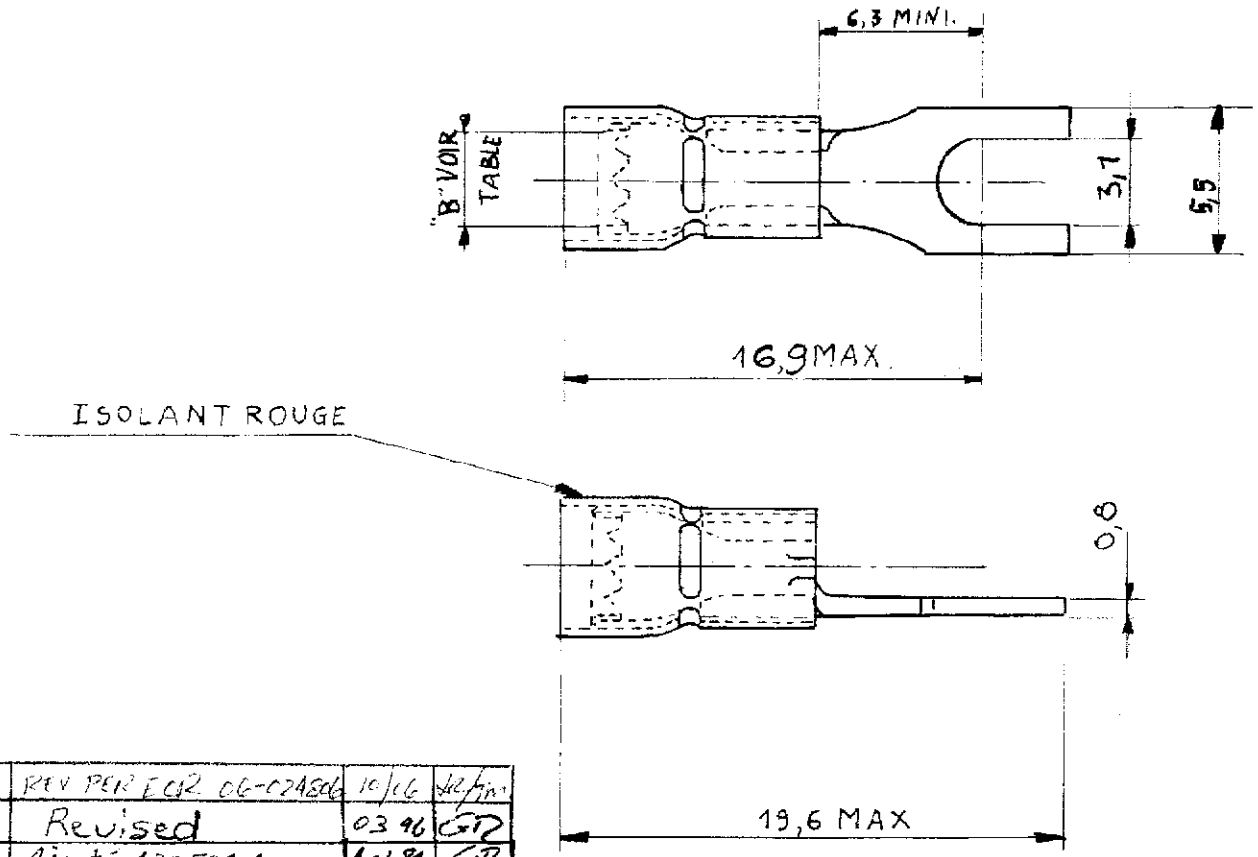

REV	REVISIONS	DATE	BY
B1	REV PER ECR 06-024806	10/06	[illegible]
B	Revised	03 96	GR
A1	Ajouté 130521-1	Oct 89	GR
A	16,9 était 10,9 MAX	14.5.74	GP

130522 B1

Nº ASSEMB. "B"

CUSTOMER PRINT FOR REFERENCE ONLY

©1959 BY AMP INCORPORATED. ALL RIGHTS RESERVED. A-MP PRODUCTS COVERED BY PATENTS AND/OR PATENTS PENDING.

-9	-8	-7	-6	-5	-4	-3	-2	-1	DWG SIZE	NUMBER	NAME	REMARKS	ITEM NO.
REQUIRED PER ASSEMBLY													
DESCRIPTION													

MATERIAL: CUIVRE | HEAT TREAT: RECUIT | FINISH: ETAME

AMP DE FRANCE

DR. MASSIEUX 17.10.03 | DATE | APP | DATE | REL | DATE

CHK. | DATE | APP. | DATE | FIRST USED

TOL: ± 0.2

TYPE: BS PIDG | PRINT DIST. LOC: F | SIZE: A | NUMBER: C130522 | REV: B1

SCALE: 4:1 | WIRE SIZE: 22-16 | CMA MAX / MIN

NAME: COSSE A FOURCHE

AMP 1252