BM5115 (ø51 x 15L)

DC Blowers

General Specifications

Allowable Ambient Temperature Range:

-10°C ~ +70°C (Operating)
-40°C ~ +70°C (Storage)
(non-condensing environment)

Outline

Units: inch (mm)

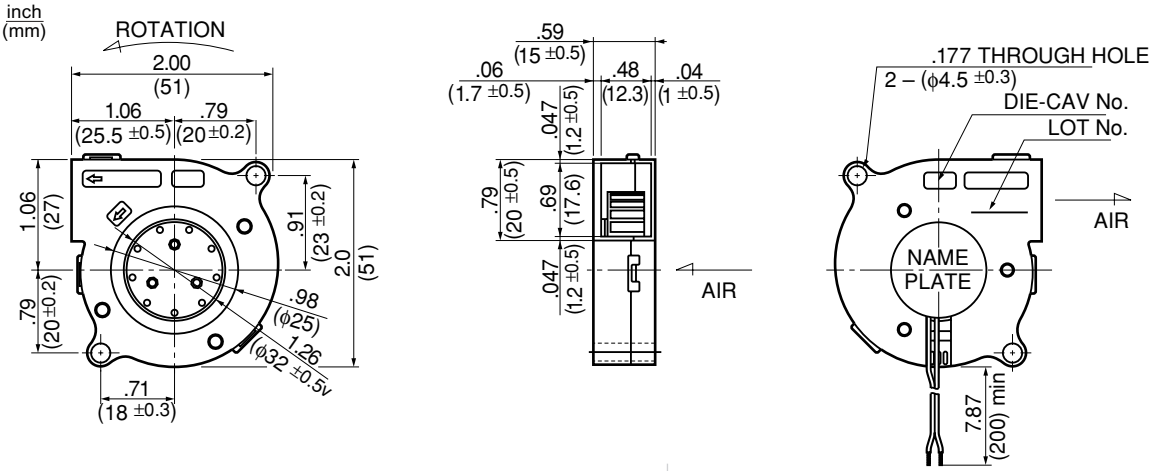

Characteristic Curves

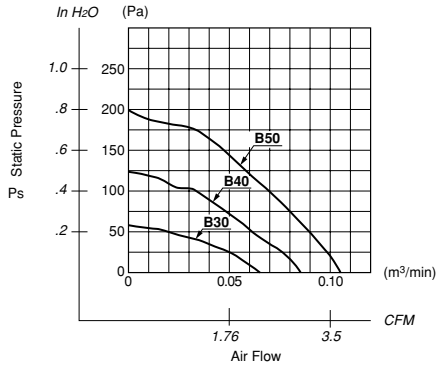

Material

Casing : Plastic (Black) 94V-0
Impeller : Plastic (Black) 94V-0
Bearing : Ball Bearing
Lead Wire: UL1061, AWG26, +Red, -Black

Specifications

MODEL	Product No.	Rated Voltage (V)	Operating Voltage (V)	Current (A)*1	Input Power (W)*1	Speed (min-1)*1	Max. Air Flow CFM*1	Max. Air Flow (m3/min)*1	Max. Static Pressure in H2O	Max. Static Pressure (Pa)*1	Noise (dB)*1	Mass (g)
BM5115-04W-**B30**-	X00	12	10.2 ~ 13.8	0.06	0.72	3500	2.1	0.06	.24	60	26.0	25
BM5115-04W-**B40**-	X00	12	10.2 ~ 13.8	0.12	1.44	4500	2.8	0.08	.48	120	35.0	25
BM5115-04W-**B50**-	X00	12	10.2 ~ 13.8	0.18	2.16	5500	3.5	0.10	.80	200	42.0	25

Rotation: Counterclockwise

*1: Average Values in Free Air