DWG. NO. SD-59110-006

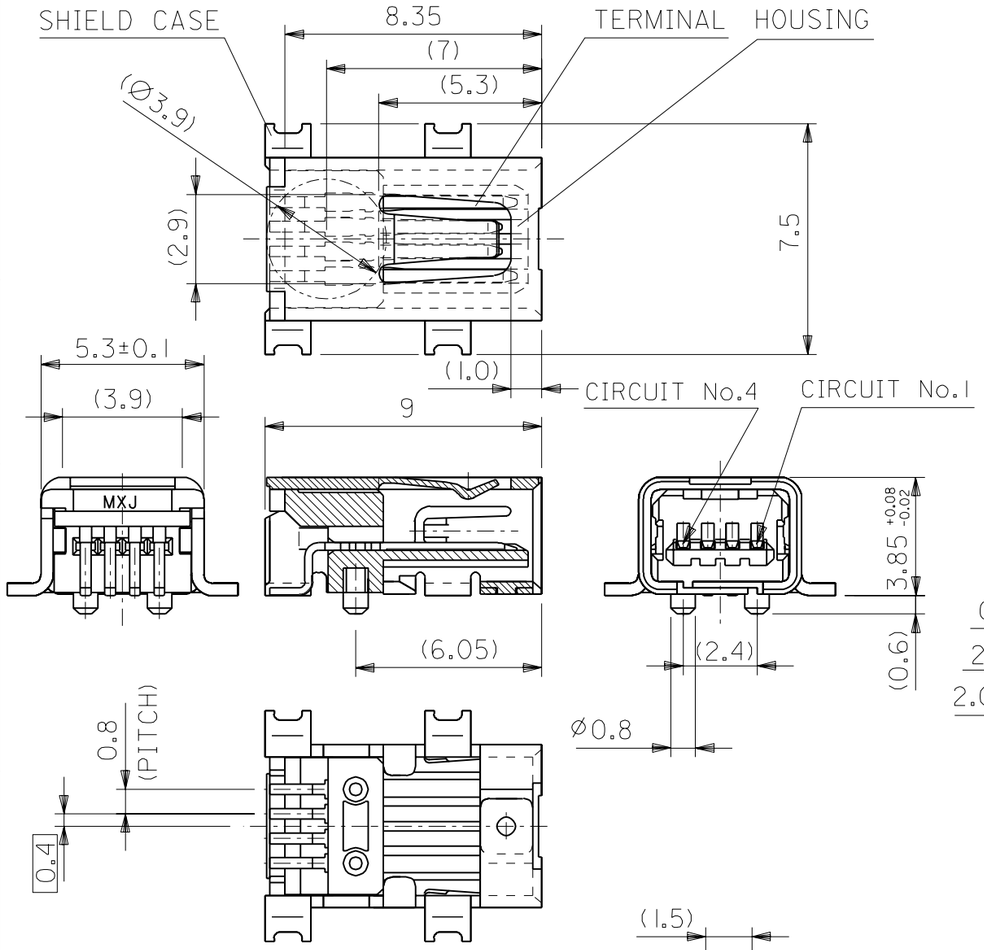

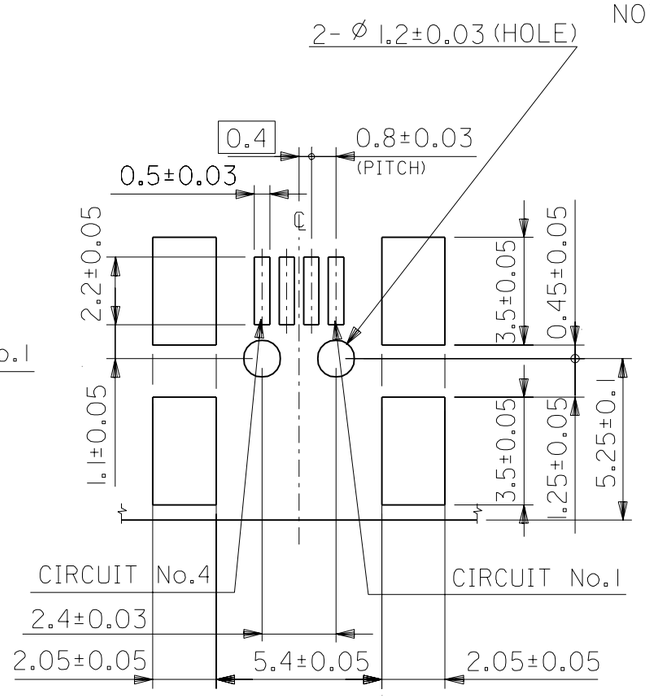

推奨基板寸法

RECOMMENDED P.C.B. PATTERN LAYOUT

注記
NOTES

1. 材質
   MATERIAL
   ハウジング：液晶ポリマー　黒色　UL94V−0
   HOUSING:LIQUID CRYSTAL POLYMER BLACK UL94V-0
   ターミナル：黄銅（t＝0．254）
   TERMINAL:BRASS(t=0.254)
   シールド　ケース：銅合金（t＝0．4）
   SHIELD CASE:COPPER ALLOY(t=0.4)
2. メッキ仕様
   PLATING
   ターミナル
   TERMINAL
   接点部：金メッキ　0．76μm　MIN.
   CONTACT AREA:GOLD 0.76MICRO METER MIN.
   半田付け部：錫メッキ　1．0μm　MIN.
   SOLDER TAIL AREA:TIN 1.0MICRO METER MIN.
   下地部：ニッケルメッキ　1．5μm　MIN.
   UNDER PLATING:NICKEL 1.5MICRO METER MIN.
   シールド　ケース
   SHIELD CASE
   ：錫メッキ　1．0μm　MIN.
   :TIN 1.0MICRO METER MIN.
   下地部：ニッケルメッキ　4．0μm　MIN.
   UNDER PLATING:NICKEL 4.0MICRO METER MIN.
3. テール、ネール平坦度は　0．1mm　MAX.
   TAIL,NAIL COPLANARITY　0.1mm MAX.
4. 嵌合相手：59204シリーズ
   MATING MATERIAL:59204SERIES
5. 本製品は59110−**21の鉛フリー品である。
   THIS PRODUCT IS LEAD FREE OF 59110-**21.

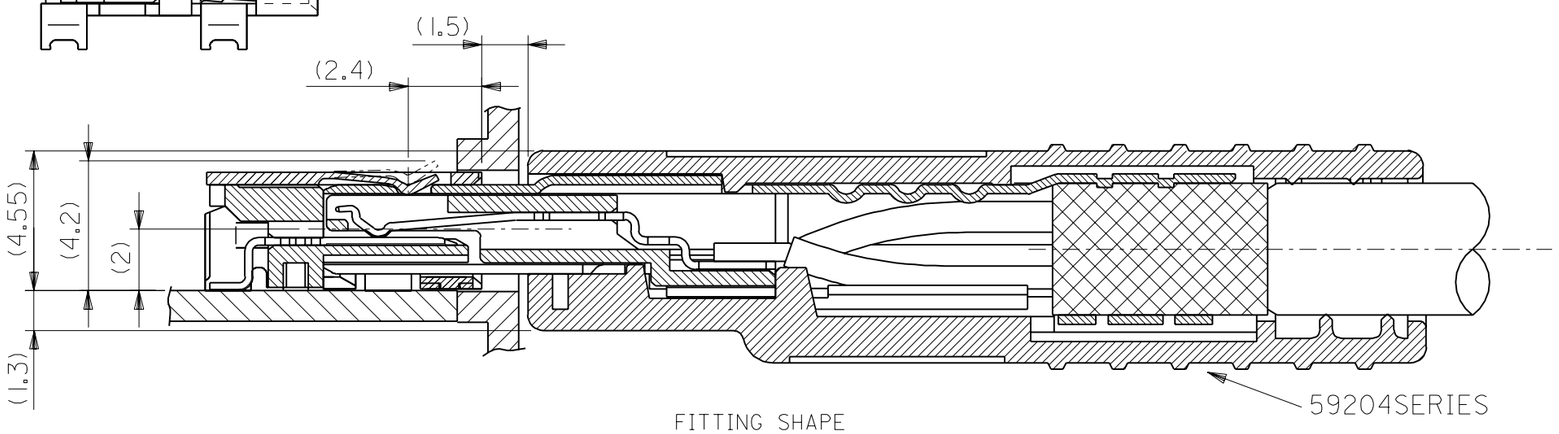

FITTING SHAPE

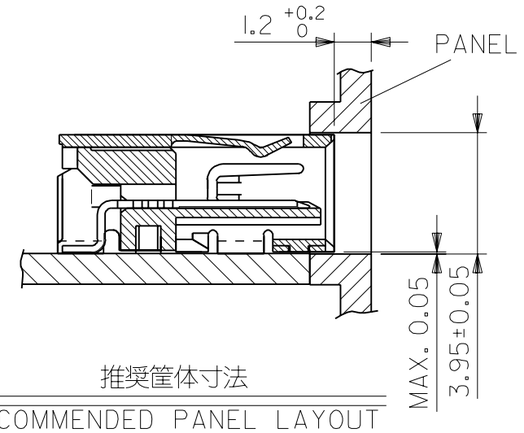

推奨筐体寸法

RECOMMENDED PANEL LAYOUT

MODEL NO.	59110-**29	DIMENSIONS: ☐ mm/INCH ☐ INCH/mm ☒ mm ONLY	SHT	REV					
SCALE 5 - 1	DESIGN UNITS ☒mm ☐INCH	THIRD ANGLE PROJECTION	REVISE ON CAD ONLY						
DRAWN BY & DATE Y.WADA '04/04/19	TITLE: 0.8 I/O CONN. REC. ASS'Y -LEAD FREE-								
CHECKED BY & DATE M.SASAO '04/04/19									
APPROVED BY & DATE M.SASAO '04/04/19	MOLEX INCORPORATED								
CAD FILENAME SD-59110-006.S01	MATERIAL NO. 59110-0429	DRAWING NO. SD-59110-006	SHEET NO. 1 OF 1						
THIS DRAWING CONTAINS INFORMATION THAT IS PROPRIETARY TO MOLEX INCORPORATED AND SHOULD NOT BE USED WITHOUT WRITTEN PERMISSION.			SIZE B						

MATERIAL 材料	SEE NOTES	GENERAL TOLERANCES: (UNLESS SPECIFIED) 一般公差							
FINISH 仕上げ	SEE NOTES	10 UNDER 未満	±0.2						
WIRE RANGE 適用電線範囲	—//—	10 OVER 以上 30 UNDER 未満	±0.25						
INS. RANGE 被覆外径	—//—	30 OVER 以上	±0.3						
		ANGLE 角度	±3°						

REV	DESCRIPTION	EC NO.	DRWN:	CH'K:	APPR:
0	RELEASED	EC NO. J2004-3869	DRWN: Y.WADA '04/04/19	CH'K: M.SASAO '04/04/19	APPR: M.SASAO '04/04/19

DO NOT SCALE DRAWING

EN-02J(097) MXJ-54