NUMBER C-165133-EE

DIMENSIONS IN INCHES—DO NOT SCALE PRINT

LTR	REVISION RECORD	DATE	DWN	APVD
C1	REVISED PER ECO-14-003208	21MAR2014	NK	DR

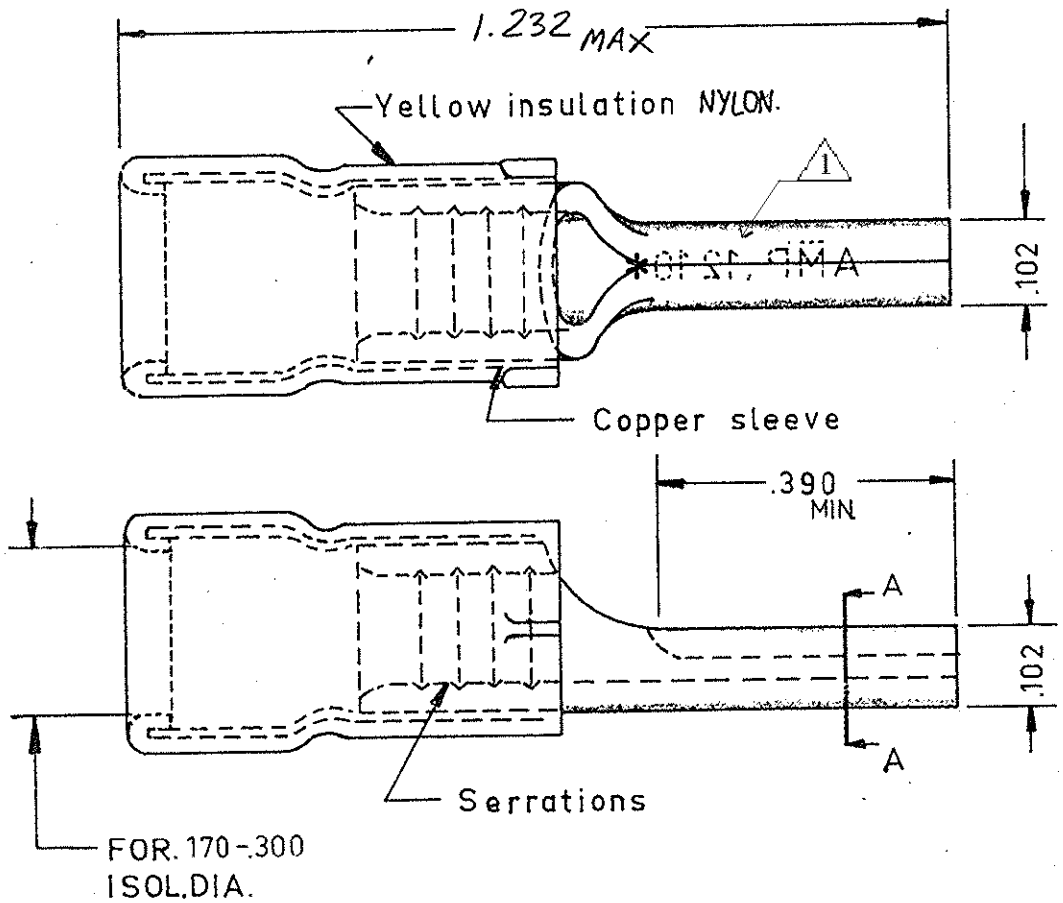

ORDER № 165133

1 STAMP AMP 12-10* APPROX AS SHOWN

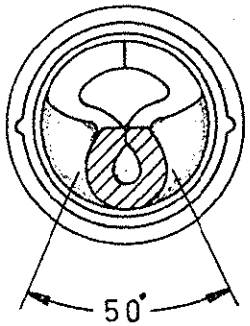

VIEW A-A

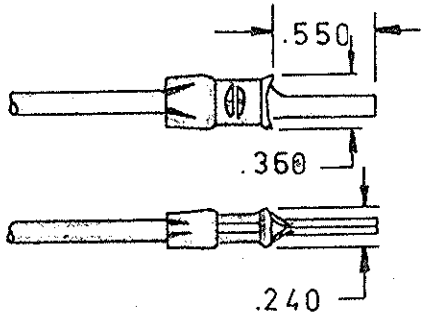

CUSTOMER PRINT
FOR REFERENCE ONLY

©1963 BY AMP Holland N.V. ALL RIGHTS RESERVED. A-MP. PRODUCTS COVERED BY PATENTS AND/OR PATENTS PENDING.

-9	-8	-7	-6	-5	-4	-3	-2	-1
REQUIRED PER ASSEMBLY								
DESCRIPTION								

DWG SIZE	NUMBER	NAME	REMARKS	ITEM NO.

MATERIAL: E-Copper
HEAT TREAT: ~
FINISH: Tinpl. E-Cu

DR: M. Blank DATE 21-2-'63 | APP | DATE | REL | DATE

CHK: J. Horváth 22-Feb.'63 DATE | APP: Wilm DATE 22-2-63 | FIRST USED | TOL ±.008

TE Connectivity

TYPE	PRINT	DIST	LOC	SIZE	NUMBER	REV
P.I.D.G.			H	A	C-165133-EE	C1

SCALE	WIRE SIZE	CMA	NAME
N.T.S.	12-10	MAX ~ MIN ~	WIRE PIN PIDG

AMP 1252-H