NMB™

NMBTC.COM / 818.341.3355

04028DA (40□ x 28L)

General Specifications

Motor Protection:
Auto Restart/Polarity Protection

Insulation Resistance:
10M Ω by DC500V Megger

Dielectric Withstand Voltage: AC 700V 1s

Allowable Ambient Temperature Range:
-10°C ~ +70°C (Operating)
-30°C ~ +70°C (Storage)
(non-condensing environment)

Expected Life

Failure Rate: 10%
40°C 70,000 Hours

Material

Casing : Plastic (Black) UL94V-0
Impeller : Plastic (Black) UL94V-0
Bearing : Ball Bearing
Lead Wire : UL10368, AWG 26, +Red, -Black
Tach Sig. : White
PWM Control : Brown

Panel Cut-Outs

Units: inch (mm)

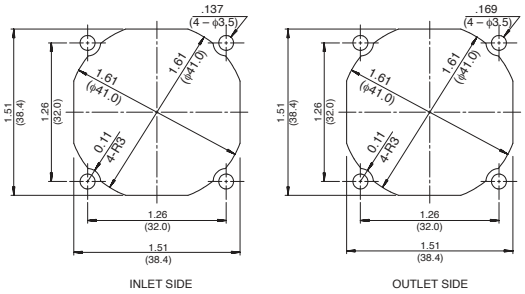

PWM Control Voltage

Vst = 0V ~ 0.4V Stop (On Duty 0%)
Vst = 3.0V ~ 5.0V Full Speed (On Duty 100%)
Vst = Open Full Speed (On Duty 100%)
(At Ta = 25°C, rated voltage 12VDC, f=25.0kHz)

Characteristic Curves

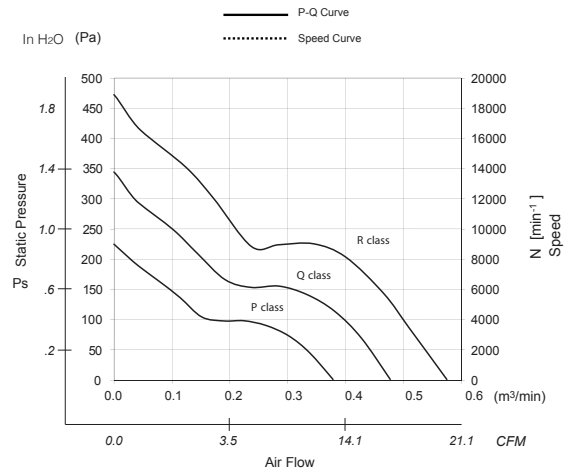

Outline

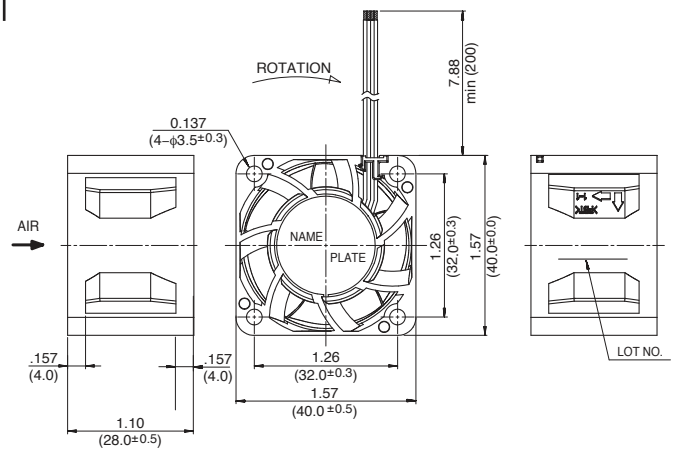

Reference PWM Duty Vs. Speed Curve

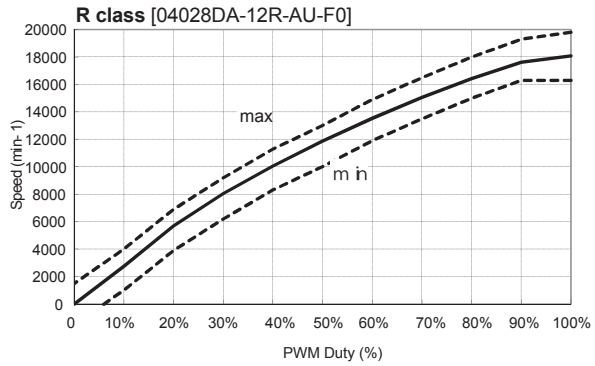

Specifications

MODEL	Rated Voltage	Operating Voltage	Current	Input Power	Speed	Max. Air Flow		Max. Static Pressure		Noise	Mass
	(V)	(V)	(A)*1	(W)*1	(min-1)*1	CFM*1	(m3/min)*1	in H2O	(Pa)*1	(dB)*1	(g)
04028DA-12P-AA-F0	12	10.8 ~ 13.2	0.18	2.16	12000	13.1	0.37	0.92	230.0	45.0	53
04028DA-12Q-AA-F0	12	10.8 ~ 13.2	0.29	3.48	15000	16.6	0.47	1.37	340.0	49.5	53
04028DA-12R-AA-F0	12	10.8 ~ 13.2	0.43	5.16	18000	20.1	0.57	1.93	480.0	54.5	53

Rotation: Clockwise Airflow Outlet: Air Out Over Struts *1: Average Values in Free Air Note: PWM/Locked Rotor/Tach Available