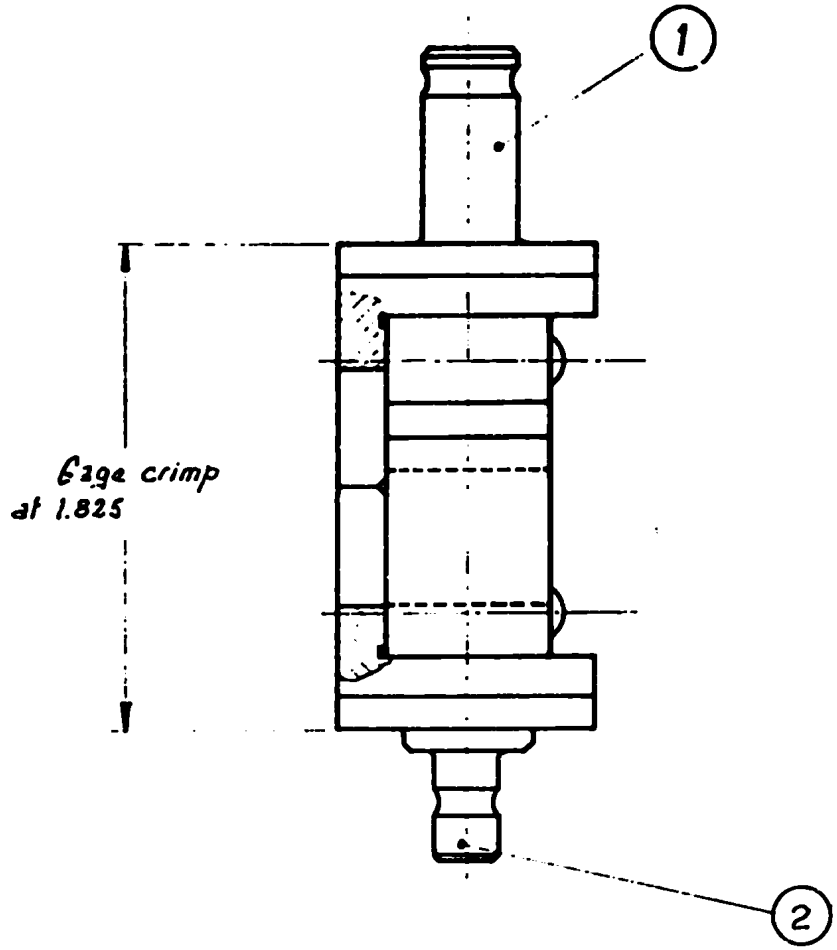

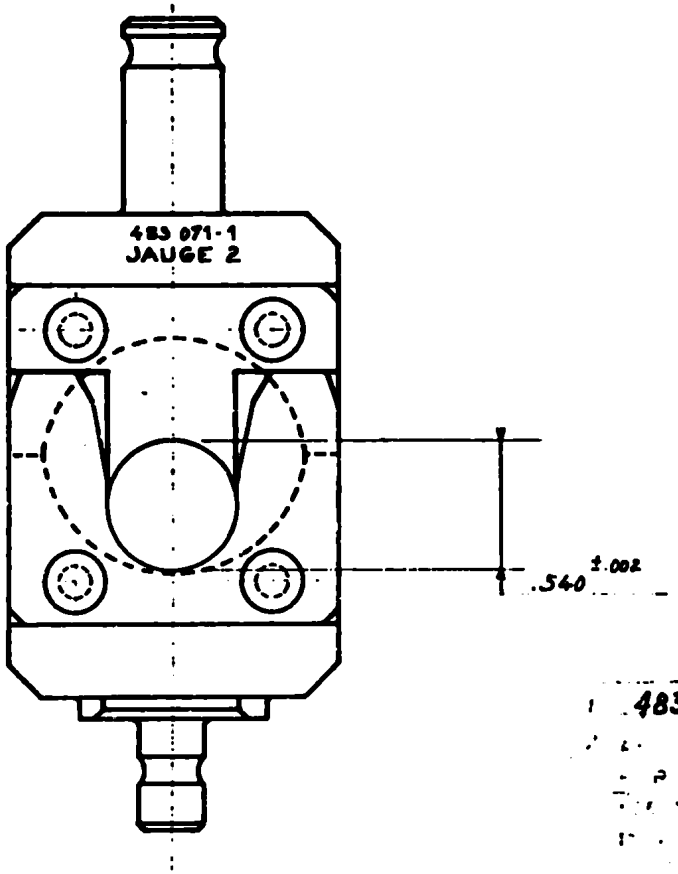

483071

RART LIST

it.	P/N	size	Name	Qty
5				
4				
3				
2	483079	B	Die assembly lower	1
1	483075	B	Die assembly upper	1

NUMBER C - 483 071

REV	REVISION RECORD	ECN	DATE
A	Originale		
B	Revised		
C	Released		

C ECR-07-030448 LS 12/07

SHEET 1 OF 1

MATERIAL —

HEAT TREAT —

COATING OR PLATING —

09.XII.77

Tyco Electronics

Tyco Electronics AMP GmbH
64625 Bensheim (Germany)

USED ON #3

69061

QC F

B

NO C - 483 071

REV C

SCALE 2/1

NAME DIE ASSEMBLY