Copyright FCI

FCIconnect.com

PRODUCT NUMBER	▱ (SHOWN BELOW)	SOLDER BALL MATERIAL
84739-001	.000" (.000mm) TO .010" (.254mm)	EUTECTIC SnPb
84739-001LF	.000" (.000mm) TO .010" (.254mm)	SnAgCu LEAD FREE (6)(7)

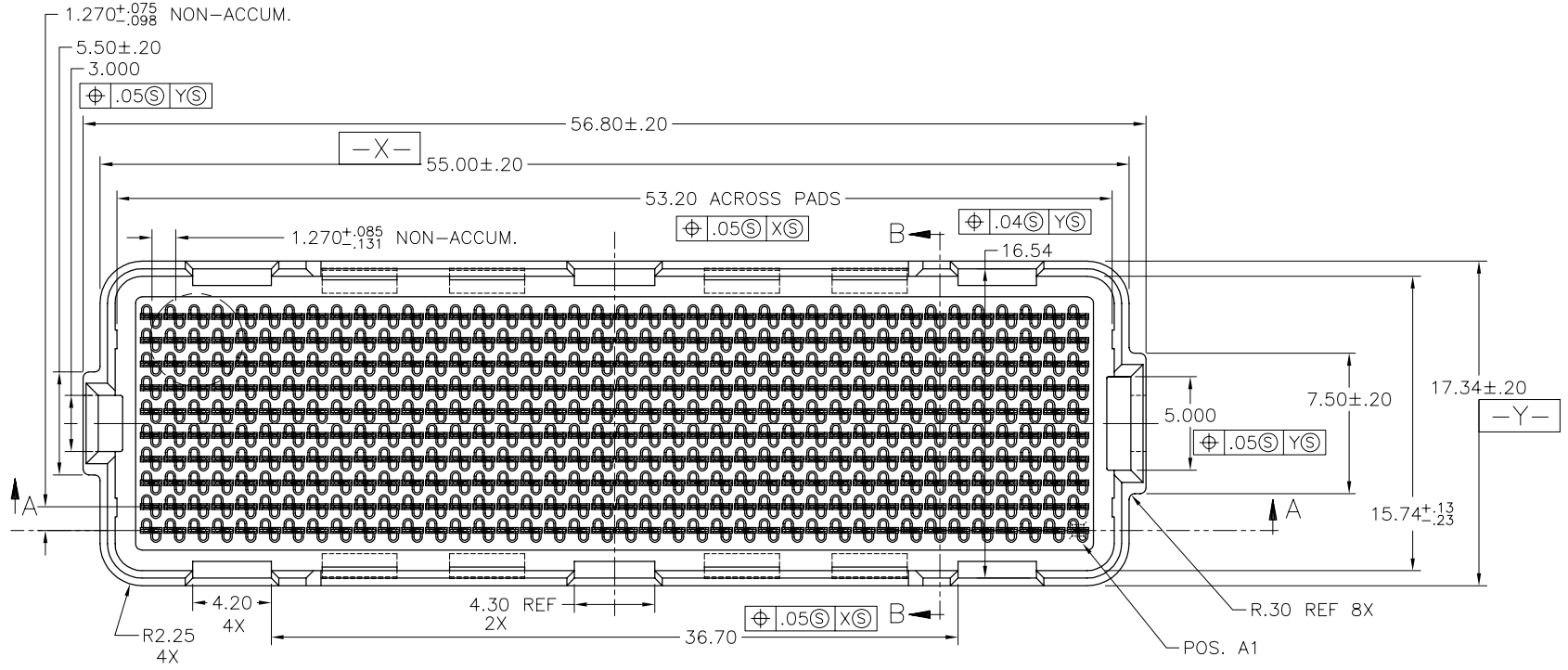

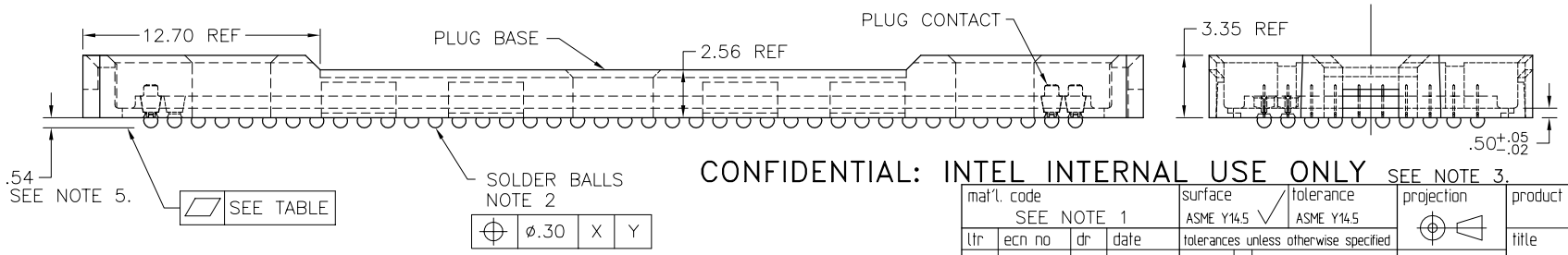

CONFIDENTIAL: INTEL INTERNAL USE ONLY SEE NOTE 3.

WAS SK-40415

mat'l. code	surface	tolerance	projection	product family
SEE NOTE 1	ASME Y14.5	ASME Y14.5		MEG-ARRAY

ltr	ecn no	dr	date
A	V81068	DRW	10.7.98
B	V90417	DRW	3.5.99
C	V00181	HLJ	09.07.00
D	V04-0940	VS	12/11/04
E	V05-0825	DAI	09/29/05
F	V06-0046	DAI	01/24/06
G	V06-0560	LP	2006/07/14

tolerances unless otherwise specified: angles 0° ±2°; linear .X±.3, .XX±.13, .XXX±.051

dr	D. WAUGHEN	9.21.98
engr	M. HAHN	9.21.98
chr	M. HAHN	9.21.98
appd	M. HAHN	9.21.98

projection: MM; scale 3:1

title: 0mm PLUG ASSY
10 X 40 = 400 POS.

dwg no 84739 | sheet 1 of 3 | size A4

type CUSTOMER Drawing

sheet index	revision	G	G	G
	sheet	1	2	3

form: A4mmXLc

Copyright FCI.

FCIconnect.com

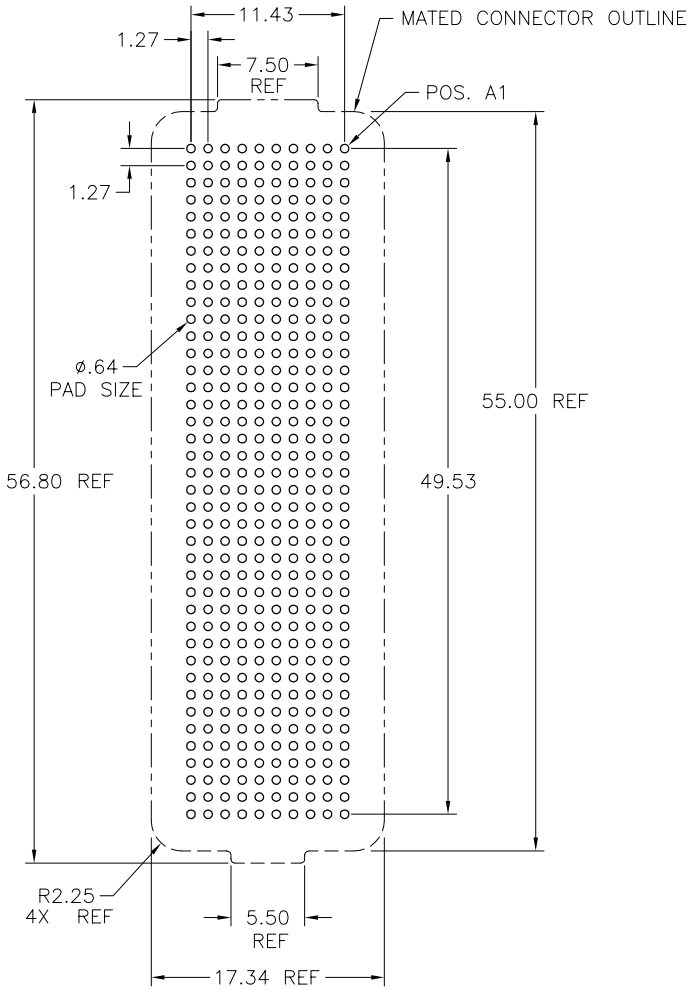

BOARD PATTERN

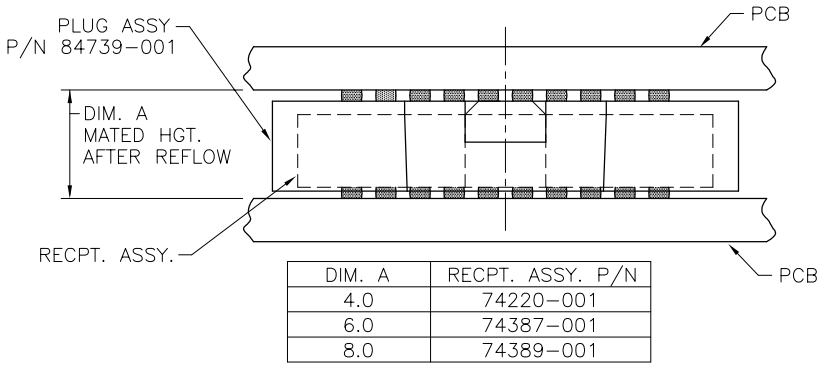

DIM. A	RECPT. ASSY. P/N
4.0	74220-001
6.0	74387-001
8.0	74389-001

MATED HEIGHT AFTER REFLOW IS BASED ON ø .64mm PAD (METAL-DEFINED) AND .13mm SOLDER PASTE STENCIL THICKNESS.

END VIEW – MATED CONNECTORS SCALE NONE

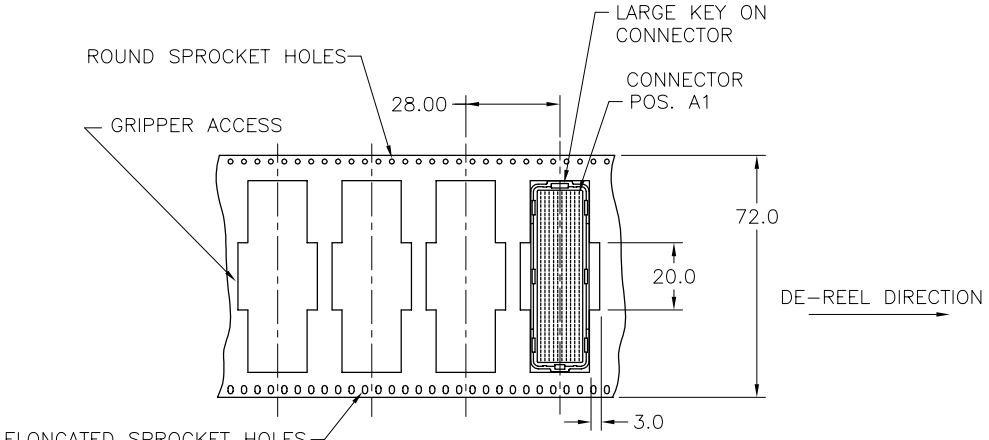

TAPE & REEL PACKAGING SCALE NONE

CONFIDENTIAL: INTEL INTERNAL USE ONLY. SEE NOTE 3.

mat'l. code: SEE NOTE 1	surface: ASME Y14.5	tolerance: ASME Y14.5	projection
ltr: G	ecn no	dr	date
	tolerances unless otherwise specified		
	angles: 0° ±2°	linear: .X ±.3 / .XX ±.13 / .XXX ±.051	mm
			scale 2:1
	dr: D.WAUGHEN	9.21.98	
	engr: M.HAHN	9.21.98	
	chr: M.HAHN	9.21.98	
	appd: M.HAHN	9.21.98	
sheet index / revision sheet			

product family	MEG-ARRAY
title	0mm PLUG ASSY 10 X 40 = 400 POS.
dwg no	84739
sheet	2 of 3
size	A4
type	CUSTOMER Drawing

form: A4mmXLc

Copyright FCI.

FCI
FCIconnect.com

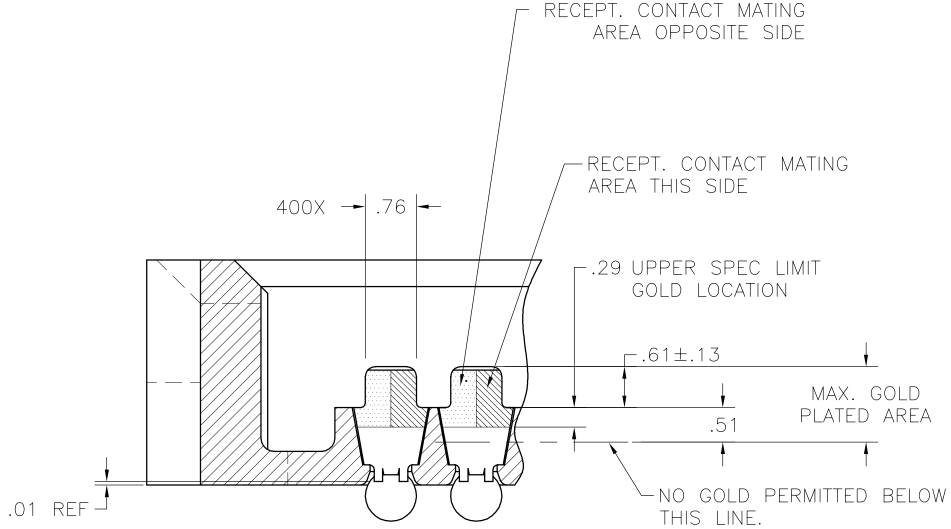

SECT. A–A

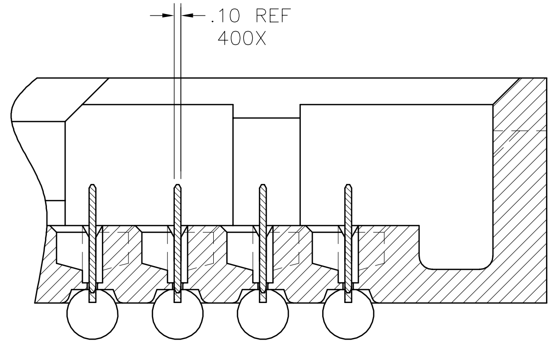

SECT.B–B
ROTATED 90° C.W.

NOTES:

1. MAT'L:
   HOUSING: NATURAL LCP (GRADE PROPRIETARY).
   CONTACT: CUPPER–NICKEL ALLOY C72500.

   PLATING:
   CONTACT: 15–40u"/.38–1.02um Au OVER
   30–120u"/.76–3.05um Ni.
   SOLDER BALL: (SEE TABLE ON SHEET1)
   EUTECTIC SnPb OR LEAD FREE
   95.5Sn/4Ag/0.5Cu

2. SOLDER BALLS WILL NOT BE PERFECT SPHERICAL SHAPE DUE TO REFLOW ATTACHMENT. NOMINAL INITIAL SOLDER BALL ø.76 (.030").

3. DRAWING NO. 84740 TO BE USED FOR INTEL CUSTOMERS (OEM).

4. REFER TO 07–747 INTEL PROCUREMENT SPEC.

5. SOLDER BALL HEIGHT TOLERANCE PENDING FINAL AGREEMENT.

6. FOR PROPER APPLICATION FOLLOW FCI APPLICATION SPECIFICATION GS–20–033 LEAD FREE SOLDER BALLS WILL NOT SOLDER PROPERLY IN A LEADED SOLDER PROCESS DUE TO A HIGHER REFLOW TEMPERATURE. LEAD FREE PRODUCT IS THERFORE NOT BACKWARDS COMPATIBLE WITH LEADED OR SOME SOLDERING APPLICATIONS. REFERENCE FCI APPLICATION SPECIFICATION

7. THIS PRODUCT MEETS EUROPEAN UNION DIRECTIVES AND OTHER COUNTRY REGULATIONS AS DESCRIBED IN GS–22–008 PRODUCT MEETING THIS DIRECTIVE IS IDENTIFIED IN THE LOT CODE NUMBER MARKED ON EACH PART BY HAVING AN "X" IN THE SEVENTH CHARACTER POSITION

CONFIDENTIAL: INTEL INTERNAL USE ONLY. SEE NOTE 3.

mat'l. code: SEE NOTE 1	surface: ASME Y14.5 / tolerance: ASME Y14.5	projection	product family: MEG–ARRAY	
ltr / ecn no / dr / date: G	tolerances unless otherwise specified: angles 0° ±2°; linear .X±.3, .XX±.13, .XXX±.051	MM; scale 10:1	title: 0mm PLUG ASSY. 10 X 40 = 400 POS.	
	dr: D. WAUGHEN 9.21.98	FCI	dwg no: 84739	sheet 3 of 3; size A4
	engr: M. HAHN 9.21.98			
	chr: M. HAHN 9.21.98			
	appd: M. HAHN 9.21.98		type: CUSTOMER Drawing	
sheet / index	revision / sheet			

PDS: Rev:G STATUS: Released Printed: May 25, 2022