APPROVED: _____

DATE: _____ TITLE: _____

Rev	AWO #	Description	Date	Appr
-		RELEASED	7/10/07	
A		REDRAWN	7/1/13	

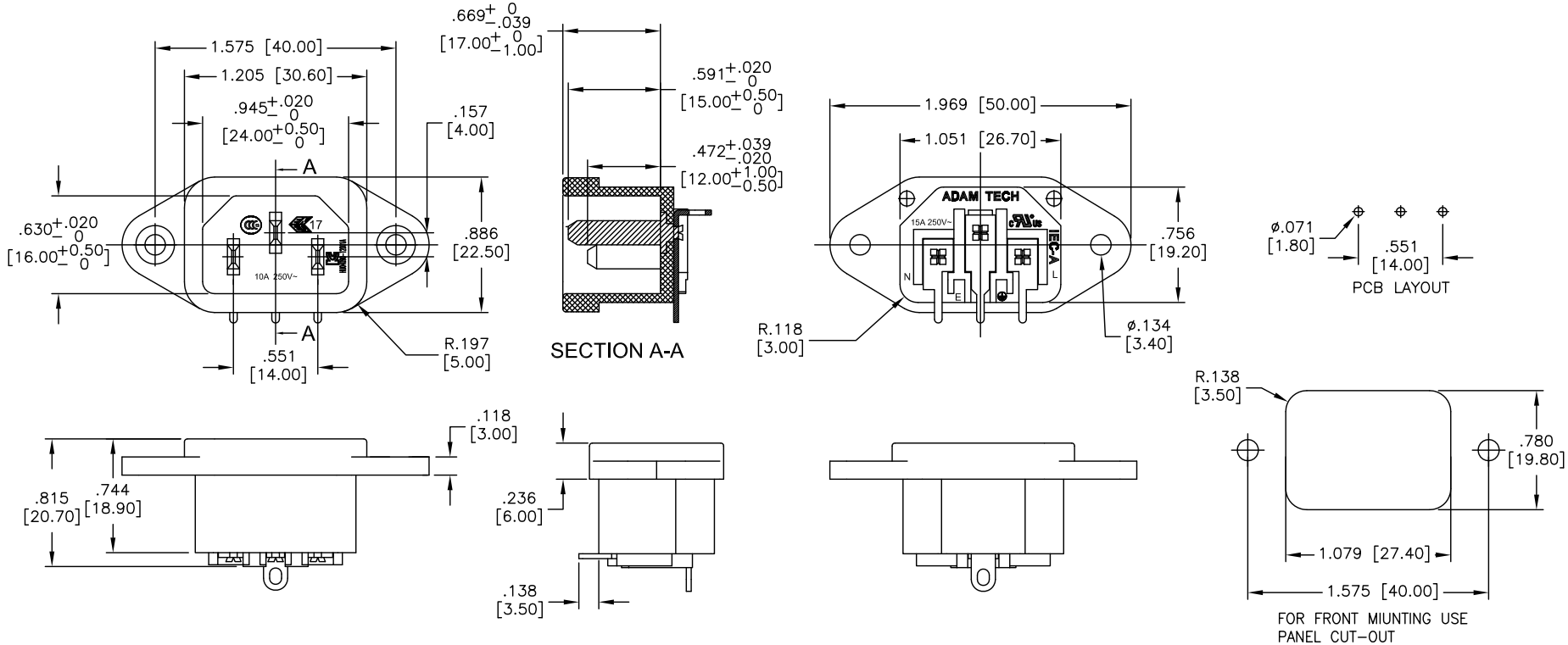

SPECIFICATIONS:
Material:
Insulator: PBT, rated UL 94V–0
Insulator color: Black
Contact: Copper Alloy, Tin Plated
Pin: Copper Alloy, Nickel Plated
Electrical:
Rating: 15A @ 250V C–ULus
10A @ 250V ENEC & CCC & KC
Insulation resistance: 100 Mohms min @ 500 VDC
Dielectric withstanding voltage: 3000 VAC for 1 minute
Environmental:
Lead free, RoHS compliant.

RoHS COMPLIANT

UNLESS OTHERWISE SPECIFIED
ALL DIMENSIONS ARE INCHES [MM]
TOLERANCES: EXCEPT AS NOTED

INCHES		HOLES	
.X	± .10	Ø.X	±.10
.XX	± .020	Ø.XX	±.015
.XXX	± .015	Ø.XXX	±.010

APPROVALS		DATE
DRAWN	SS	7/10/07
CHECKED		
APPROVED		

ADAM TECH
909 Rahway Avenue, Union, NJ 07083
Phone: 908-687-5000 Fax: 908-687-5710

TITLE: IEC MALE INLET, FLANGED PANEL MOUNT RIGHT ANGLE, PCB TAILS

SIZE	PART NO.	REV.
X	IEC-A-4	A

REF: S00087C | SCALE: NTS | SHEET 1 OF 1