ITEM NO.	PART NUMBER	DESCRIPTION	QTY.	COMPONENT NOTES
1	50-00026	Connector, dc plug, 5.5x2.5xL23 mm, molding style, spring contacts	1	
2	30-00683	Wire, 2C TS, 18 AWG, UL2464, 300V, 80C, 5.2 mm, VW-1, PVC	1	
3	24-00182	Overmold, dc plug, 5.5 mm, Tensility	1	black

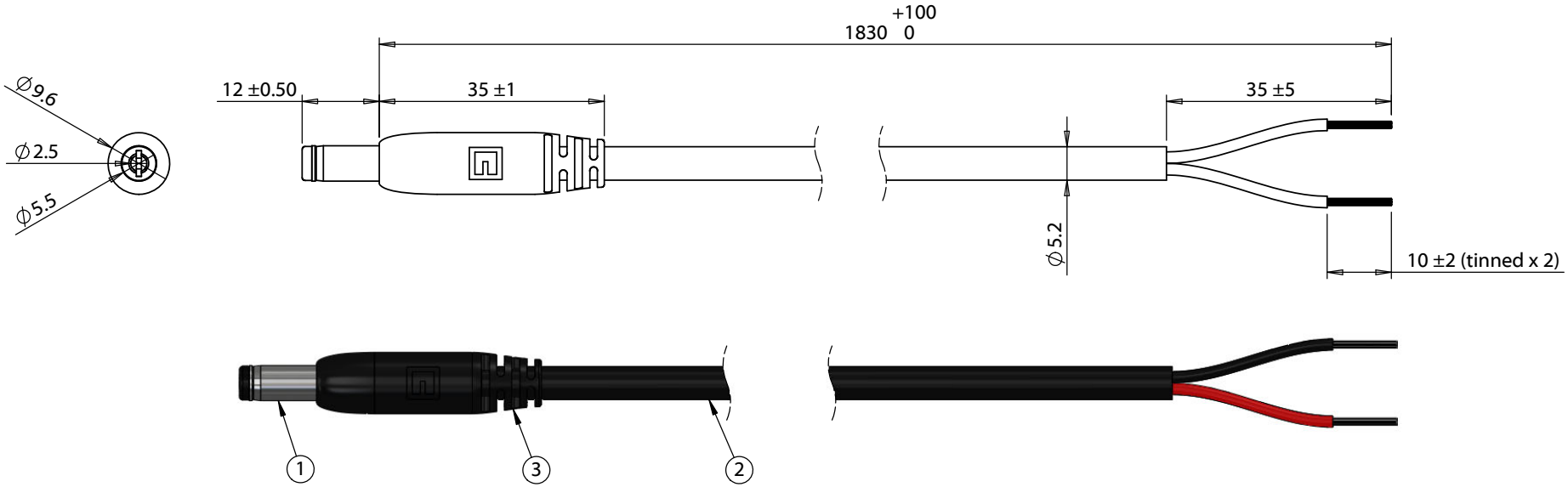

Notes:
Functionally equivalent components may be substituted

Electrical requirements: 8 A, 48 Vdc

Wiring Diagram	
50-00026	wire color
center	red
sleeve	black

Revision:	Date:	Description:
A	9/13/2016	Initial release

Prepared: JD Digitally signed by JD Date: 2023.02.14 10:02:11 -08'00'

Verified: PB Digitally signed by PB Date: 2023.02.14 10:12:03 -08'00'

Dimensions are in millimeters.
Tolerances:
X: ± 0.5 mm
X.X: ± 0.3 mm
X.XX: ± 0.05 mm

Notes:

RoHS compliant

Function test: no open, no short circuit, no intermittent

Description:

Cable, 1830 mm, 5.5x2.5x12 mm 50-00026 dc plug to stripped tinned, 18 AWG, 30-00683 wire

TENSILITY
tel 1.541.323.3228 800 877.670.7118
fax 1.541.323.4202 web tensility.com

Size: A
Part number: 10-02220
Scale: 1:1
Sheet 1 of 1

To see a custom version of this cable assembly, call Tensility at 541-323-3228 or email engineering@tensility.com

5 4 3 2 1