Mallory Sonalert Products, Inc.

Part #: **SC648S**

Sales Outline Drawing

Revision: **F**

Specifications:

Sound Level Category	Loud
Mode of Operation	Siren Sweep Up & Down @ 0.2 seconds @ 3.5 to 6.5 per sec
Voltage Rating	10 to 48 VDC
Frequency	1900 ± 300 to 2900 ± 300 Hz
Loudness @ 2 FT	80 to 91 dB(A) Typ.
Loudness @ Min Vdc	80 dB(A) @ 2 Feet and 48 Vdc
Loudness @ Max Vdc	90 dB(A) @ 2 Feet and 10 Vdc
Current Draw	38-80mA
Duty Cycle (%)	50
Housing Material	6/6 Nylon, Color: Black
Storage Temperature	-40° to +85° C
Operating Temperature	-30° to +65° C
Panel Mounting	Recommended hole size is 1.25"(31.75mm). Thread front will fit standard 30mm(1.181") hole.
Knurled Nut	Used to attach part to panel. The max recommended torque is 10 in-lbs.
Weight (Typical)	2.1 oz (60g)
NEMA 3R,4X, & 12	Approved with use of ACC03.
Options	Please contact factory.

Dimensions: Inches (mm)

cUL Recognized

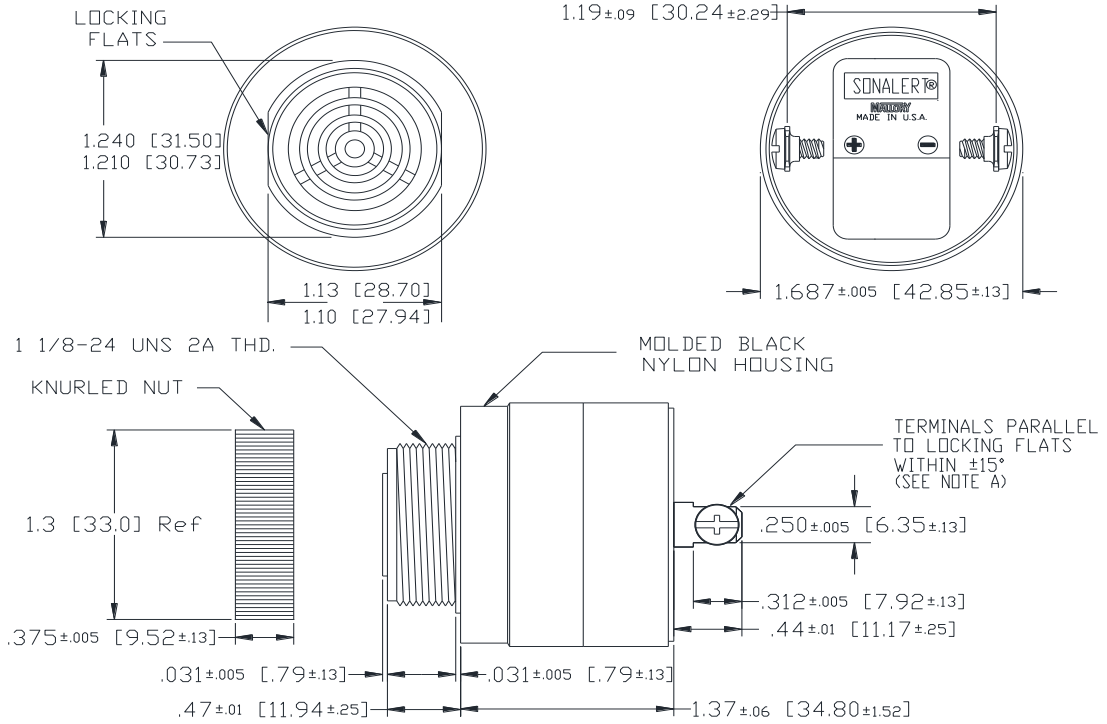

NOTE A: TERMINALS-.032 BRASS TIN PLATED, TAPPED FOR #6-32 SCREW. TWO #6-32 NICKEL PLATED BRASS SCREWS INCLUDED. WILL ACCEPT 1/4" QUICK CONNECT.

NOTE B: MOUNTING- REMOVE BLACK PLASTIC NUT AND INSERT THREADED FRONT THROUGH 1.25" HOLE PUNCHED IN PANEL, IF ORIENTATION IS NEEDED, NOTE LOCKING FLATS ON DRAWING. SCREW NUT BACK ON. DO NOT OVERTIGHTEN.

4411 South High School Road, Indianapolis, Indiana 46241 U.S.A · Phone: (317) 612-1000 Fax: (317) 612-1010 www.mspindy.com