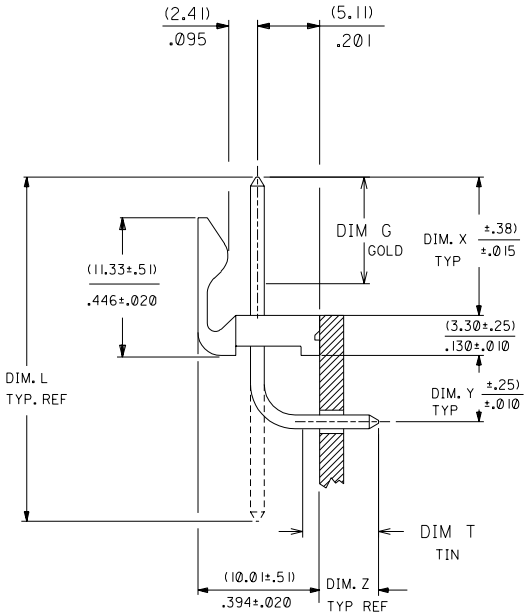

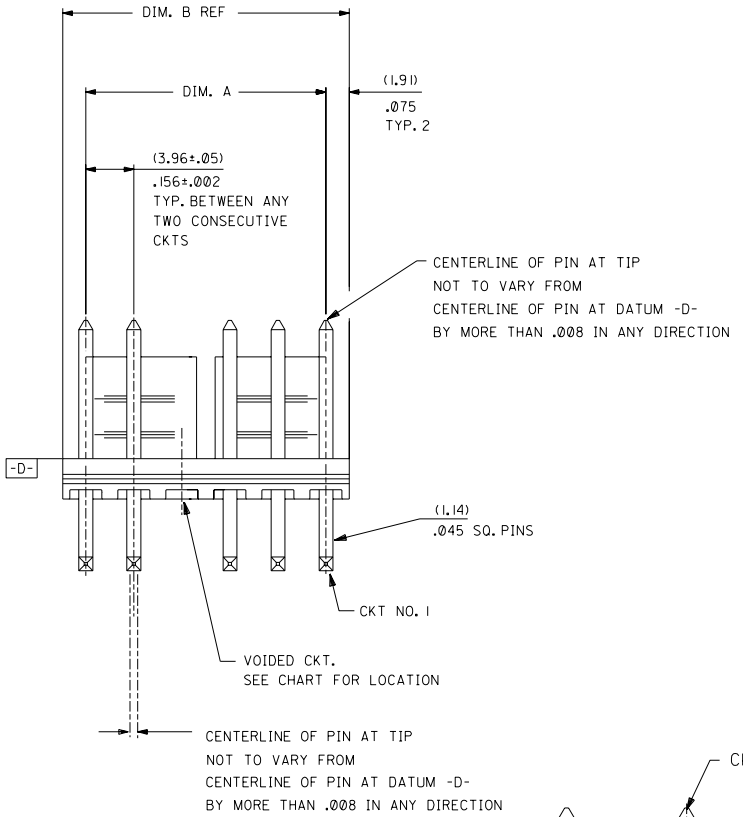

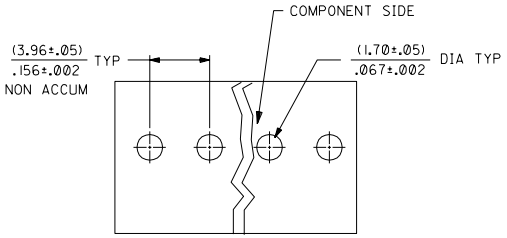

RECOMMENDED PC BOARD HOLE LAYOUT

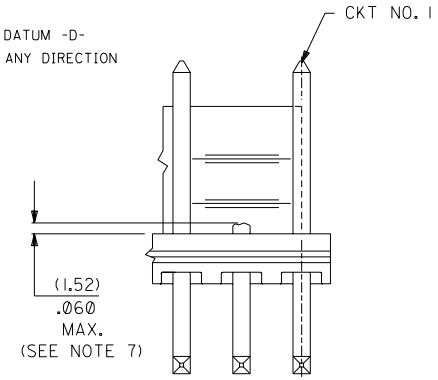

DETAIL A

(OPTIONAL PIN CUT-OFF TYPE VOID)

NO. OF CKT'S.	DIM. A	DIM. B
2	(3.96±.05) / .156±.002	(7.77) / .306
3	(7.92±.08) / .312±.003	(11.73) / .462
4	(11.89±.08) / .468±.003	(15.70) / .618
5	(15.85±.10) / .624±.004	(19.66) / .774
6	(19.81±.10) / .780±.004	(23.62) / .930
7	(23.77±.10) / .936±.004	(27.58) / 1.086
8	(27.74±.13) / 1.092±.005	(31.55) / 1.242
9	(31.70±.13) / 1.248±.005	(35.51) / 1.398
10	(35.66±.13) / 1.404±.005	(39.47) / 1.554
11	(39.62±.15) / 1.560±.006	(43.43) / 1.710
12	(43.59±.15) / 1.716±.006	(47.40) / 1.866
13	(47.55±.15) / 1.872±.006	(51.36) / 2.022
14	(51.51±.18) / 2.028±.007	(55.32) / 2.178
15	(55.47±.18) / 2.184±.007	(59.28) / 2.334
16	(59.44±.18) / 2.340±.007	(63.25) / 2.490
17	(63.40±.20) / 2.496±.008	(67.21) / 2.646
18	(67.36±.20) / 2.652±.008	(71.17) / 2.802

NOTES:

1. * PRECEDING ENG. NO. IN CHART DESIGNATES STANDARD PRODUCT.
2. SOLDERABILITY: WHEN PARTS ARE SOLDERED AT A TEMPERATURE OF 230°C (446°F) FOR 5 SECONDS, EACH SOLDERED SURFACE SHALL BE A MINIMUM OF 95% COVERED WITH A SMOOTH CONTINUOUS ADHERENT COATING. FOR OTHER INFORMATION SEE ES-152.
3. PIN PUSH OUT FORCE: PRIOR TO SOLDERING, A 3 POUND MINIMUM FORCE (IN EITHER DIRECTION) SHALL BE REQUIRED TO PUSH THE PIN OUT OF THE HEADER.
4. FOR ADDITIONAL INFORMATION AND TESTING PROCEDURES SEE PS-08-50.
5. PARTS ARE STACKABLE END TO END ON (3.96)/.156 CENTERS.
6. FOR PART WITH PEGS SEE DWG NO. SDA-42492
7. BURRS DUE TO CUTTING OFF OF PINS MUST NOT VARY FROM CENTERLINE OF PIN AT DATUM -D- BY MORE THAN .008 IN ANY DIRECTION.

MATERIAL: HEADER: GLASS FILLED POLYESTER, 94V-0, MOLDED NATURAL (WHITE).
PIN: BRASS

PLATINGS:

(102) ELECTRO TIN .000450/.000200 OVER .000200/.000100 COPPER
(567) SELECT GOLD 15 M.I. MIN, SELECT TIN/LEAD 100 M.I. MIN., OVER NICKEL
(569) SELECT GOLD 30 M.I. MIN, SELECT TIN/LEAD 100 M.I. MIN., OVER NICKEL
FOR ADDITIONAL INFORMATION SE SDES-88.

LTR.	REVISIONS	LTR.	REVISIONS
		E2	REL SHT 5 UCP2003-0755 11/6/2002 SAMIEC
		E1	REL SHT 4 UCR2002-0555 12/17/01 SAMIEC
		E	ADD PACK SPEC UCR2002-0087 7/26/01 SAMIEC

DIMENSIONS SHOWN (METRIC) INCH
UNLESS OTHERWISE SPECIFIED TOLERANCES: ANGULAR ± 1/2°

	INCH	METRIC
3 PLACE	±	
2 PLACE	±	±
1 PLACE		±

DRAFT WHERE APPLICABLE MUST REMAIN WITHIN DIMENSIONS

DRWG. BY SAMIEC | CHK'D. BY PATEL
APP'D. BY LENZ | SCALE :

MFG.	SH.	REV.
6	E	
5	E2	
4	E1	
3	E	
2	E	
1	E2	

▽ = 0 ▼ = 0 REVISE ONLY ON CAD SYSTEM

TITLE
FRICTION LOCK HEADER ASS'Y
.156 ℄ BENT SQ PINS, W/O PEGS
41792 SERIES DWG.

MOLEX INCORPORATED
LISLE, ILL. 60532 U.S.A.

SHEET NO. 1 OF 6 | DATE 09/09/87

PART NO. SEE CHART | DRWG. NO. SDA-41792

FILE NAME S41792X1

THIS DRAWING CONTAINS INFORMATION THAT IS PROPRIETARY TO MOLEX INC. AND SHOULD NOT BE USED WITHOUT WRITTEN PERMISSION.

DIV. KK | SIZE C

41792

ENG. NO.	HEADER NO.	PIN NO.	PLATING	DIM. L	DIM. X	DIM. G GOLD	DIM. Y	DIM. Z	DIM. T TIN	DIM. W	NO OF CKTS	VOID CKTS	PACKAGING
A-41792-0370/0386	41790-0002/0018	2161-21(102)	102	(28.58) / 1.125	(11.43) / .450	( ) / N/A	(5.41) / .213	(4.60) / .181	( ) / OVERALL	90°	2-18		BULK PER PK-41792-002
A-41792-0417/0432	41790-0002/0018	2161-37(102)	102	(27.94) / 1.100	(11.43) / .450	( ) / N/A	(5.41) / .213	(3.96) / .156	( ) / OVERALL	90°	3-18	1	BULK PER PK-41792-002
A-41792-0433/0445	41790-0002/0018	2161-37(102)	102	(27.94) / 1.100	(11.43) / .450	( ) / N/A	(5.41) / .213	(3.96) / .156	( ) / OVERALL	90°	6-18	6	BULK PER PK-41792-002
A-41792-0446/0459	41790-0002/0018	2161-37(102)	102	(27.94) / 1.100	(11.43) / .450	( ) / N/A	(5.41) / .213	(3.96) / .156	( ) / OVERALL	90°	5-18	3,5	BULK PER PK-41792-002
A-41792-0460/0471	41790-0002/0018	2161-37(102)	102	(27.94) / 1.100	(11.43) / .450	( ) / N/A	(5.41) / .213	(3.96) / .156	( ) / OVERALL	90°	7-18	2,7	BULK PER PK-41792-002

A-41792-0341/0352			A-41792-0370/0386			A-41792-0417/0432			A-41792-0433/0445			A-41792-0446/0459			A-41792-0460/0471		
EDP NO.	ENG. NO.	NO OF CKTS	EDP NO.	ENG. NO.	NO OF CKTS	EDP NO.	ENG. NO.	NO OF CKTS	EDP NO.	ENG. NO.	NO OF CKTS	EDP NO.	ENG. NO.	NO OF CKTS	EDP NO.	ENG. NO.	NO OF CKTS
		2	26-60-5022	A-41792-0370	2			2			2			2			2
		3	26-60-5032	A-41792-0371	3	27-62-5030	A-41792-0417	3			3			3			3
		4	26-60-5042	A-41792-0372	4	41792-0418	A-41792-0418	4			4			4			4
		5	41792-0373	A-41792-0373	5	41792-0419	A-41792-0419	5			5	41792-0446	A-41792-0446	5			5
		6	26-60-5062	A-41792-0374	6	41792-0420	A-41792-0420	6	41792-0433	A-41792-0433	6	26-60-5064	A-41792-0447	6			6
		7	41792-0375	A-41792-0375	7	41792-0421	A-41792-0421	7	41792-0434	A-41792-0434	7	41792-0448	A-41792-0448	7	41792-0460	A-41792-0460	7
		8	41792-0376	A-41792-0376	8	41792-0422	A-41792-0422	8	27-62-5082	A-41792-0435	8	41792-0449	A-41792-0449	8	41792-0461	A-41792-0461	8
		9	41792-0377	A-41792-0377	9	41792-0423	A-41792-0423	9	41792-0436	A-41792-0436	9	41792-0450	A-41792-0450	9	26-60-5096	A-41792-0462	9
		10	26-60-5102	A-41792-0378	10	41792-0424	A-41792-0424	10	27-62-5102	A-41792-0437	10	41792-0451	A-41792-0451	10	41792-0463	A-41792-0463	10
		11	41792-0379	A-41792-0379	11	41792-0425	A-41792-0425	11	41792-0438	A-41792-0438	11	41792-0452	A-41792-0452	11	41792-0464	A-41792-0464	11
		12	26-60-5122	A-41792-0380	12	41792-0426	A-41792-0426	12	41792-0439	A-41792-0439	12	41792-0453	A-41792-0453	12	41792-0465	A-41792-0465	12
		13	41792-0381	A-41792-0381	13	41792-0427	A-41792-0427	13	41792-0440	A-41792-0440	13	41792-0454	A-41792-0454	13	41792-0466	A-41792-0466	13
		14	41792-0382	A-41792-0382	14	41792-0428	A-41792-0428	14	41792-0441	A-41792-0441	14	41792-0455	A-41792-0455	14	41792-0467	A-41792-0467	14
		15	41792-0383	A-41792-0383	15	41792-0429	A-41792-0429	15	41792-0442	A-41792-0442	15	41792-0456	A-41792-0456	15	41792-0468	A-41792-0468	15
		16	41792-0384	A-41792-0384	16	41792-0430	A-41792-0430	16	41792-0443	A-41792-0443	16	41792-0457	A-41792-0457	16	41792-0469	A-41792-0469	16
		17	41792-0385	A-41792-0385	17	41792-0431	A-41792-0431	17	41792-0444	A-41792-0444	17	41792-0458	A-41792-0458	17	41792-0470	A-41792-0470	17
		18	41792-0386	A-41792-0386	18	41792-0432	A-41792-0432	18	41792-0445	A-41792-0445	18	41792-0459	A-41792-0459	18	41792-0471	A-41792-0471	18

	SEE SHEET 1		SEE SHEET 1
	SEE SHEET 1		SEE SHEET 1
	SEE SHEET 1		SEE SHEET 1
	SEE SHEET 1		SEE SHEET 1
	SEE SHEET 1	E2	SEE SHEET 1
	SEE SHEET 1	E	SEE SHEET 1
	SEE SHEET 1	C	SEE SHEET 1
LTR.	REVISIONS	LTR.	REVISIONS

DIMENSIONS SHOWN (METRIC) INCH

UNLESS OTHERWISE SPECIFIED TOLERANCES: ANGULAR ± 1/2°

	INCH	METRIC
3 PLACE	±	
2 PLACE	±	±
1 PLACE		±

DRAFT WHERE APPLICABLE MUST REMAIN WITHIN DIMENSIONS

DRWG. BY SAMIEC | CHK'D. BY PATEL | APP'D. BY LENZ | SCALE :

▽ = 0 ▼ = 0 REVISE ONLY ON CAD SYSTEM

TITLE FRICTION LOCK HEADER ASSY .156¢ BENT SQ PINS 41792 SERIES DWG

molex MOLEX INCORPORATED LISLE,ILL. 60532 U.S.A.

SHEET NO. 5 | DATE 06/28/88

PART NO. SEE CHART | DRWG. NO. SD A-41792

FILE NAME S41792X5

THIS DRAWING CONTAINS INFORMATION THAT IS PROPRIETARY TO MOLEX INC. AND SHOULD NOT BE USED WITHOUT WRITTEN PERMISSION.

DIV. C | SIZE C

41792