This drawing is the property of Tusonix, Inc., and may not be used, reproduced, published or disclosed to others without expressed authorization by Tusonix Inc.

DATA SHEET DRAWING

Electrical testing per Tusonix standard test plans and MIL-Std-202 test methods.

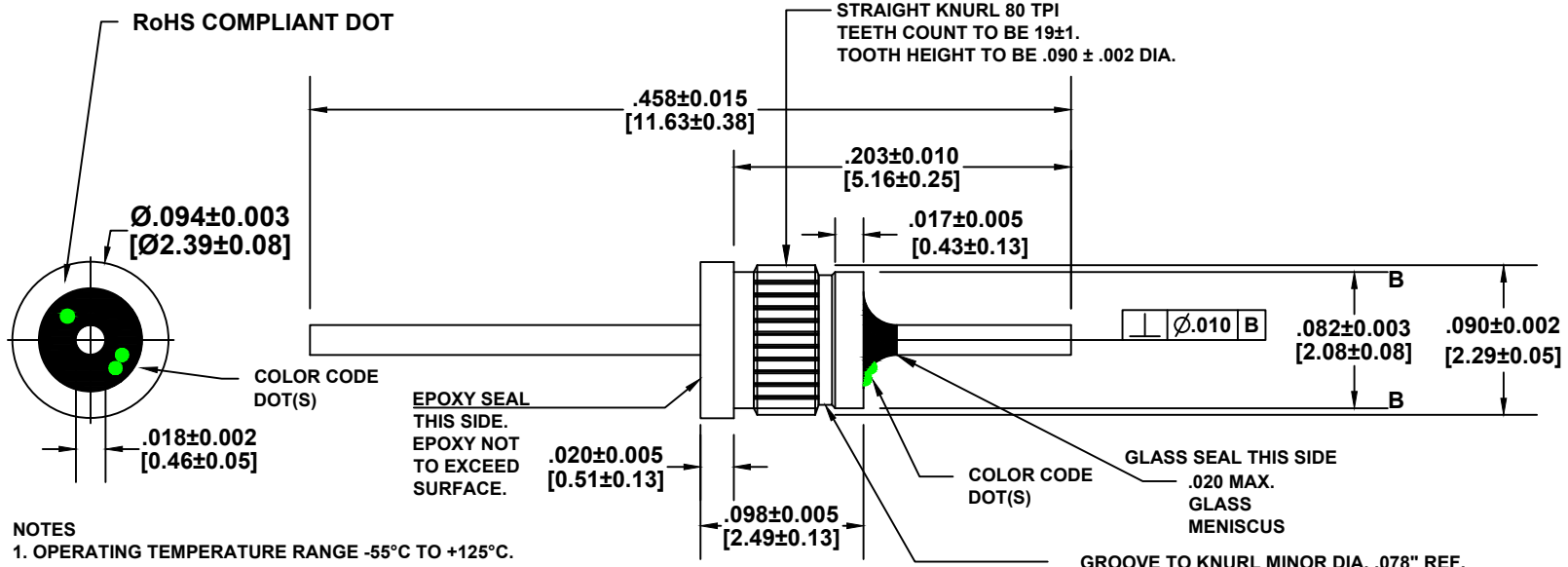

NOTES
1. OPERATING TEMPERATURE RANGE -55°C TO +125°C.
2. GOLD PLATED CASE AND LEAD.
3. EPOXY SEALED ON THE OPPOSITE END FROM THE GLASS SEAL.
4. PROPER INSTALLATION REQUIRES FIRM STEADY PRESSURE UNTIL FLANGE IS FULLY SEATED.
5. RECOMMENDED MOUNTING HOLE: .085±.001 [2.18±0.01]
6. END OF LEAD INDICATED TO BE FREE OF BURRS.
7. TUSONIX NON-RoHS COMPLIANT PART NUMBER: 4310-018.
   TUSONIX RoHS COMPLIANT PART NUMBER: 4310-018LF.
   CUSTOMER MUST SPECIFY NON-RoHS OR RoHS PART NUMBER WHEN ODERING.
8. COLOR CODE: GREEN/GREEN. RoHS COMPLIANT PART MARKED WITH ADDITIONAL GREEN DOT FOR IDENTIFICATION.

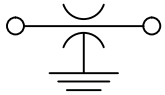

CIRCUIT

Cx (pF)	TOL.	DC WORKING VOLTAGE		I DC	I.R. MIN @ 100 VDC	DWV
		85°C	125°C			
1500	+100% -0%	150	100	1A	10 G Ω	250 VDC

TYPICAL NO LOAD INSERTION LOSS (dB) @ 25°C PER MIL-STD-220

10 MHz	100 MHz	1 GHz	10 GHz
5	22	35	45

DIMENSIONS:
ENGLISH UNITS - INCHES
METRIC UNITS - [mm]

ORIENTATION

TUSONIX
A Subsidiary of CTS Electronic Components
TUCSON, ARIZONA

--TOLERANCES--
Unless Otherwise Specified

2 Place Decimal ±	.01
3 Place Decimal ±	.005
Angles ±	5 °

Title **MINIATURE PRESS-IN EMI FILTER**

Dwn R.C. 12-02-15 | Ckd R.C. 12-02-15

Material SEE NOTES

Scale: NOT TO SCALE

Sheet 1 of 1

A | 4310-018

REVISION RECORD

REV	DATE	CHG BY	CHANGE
A	12-02-15	R.C.	ORIGINAL RELEASE
B	09-29-16	R.C.	MODIFIED COLOR DOT PLACEMENT. NOTE 5 HOLE DIM.,ADDED EPOXY FILL NOTE