THIRD ANGLE PROJ.

NOTES:
1. MATERIAL AND FINISH (PLATING THICKNESS IN MICRO-INCHES):
   BODY - BRASS, GOLD PLATING
   CONTACT - BERYLLIUM COPPER, GOLD PLATING
   INSULATOR - PTFE, NATURAL
2. ELECTRICAL:
   A. IMPEDANCE:50 OHM
   B. FREQUENCY RANGE: 0-2 GHz
   C. VSWR (RETURN LOSS): 1.2 MAX.
   D. DIELECTRIC WITHSTANDING VOLTAGE:1000 VRMS. (FOR ONE MINUTE)
   E. CONTACT RESISTANCE: 5 mOHM MAX. (CENTER CONTACT)
      1 mOHM MAX. (OUTER CONTACT)
   F. VOLTAGE RATING: 500 VOLTS
   G. INSULATION RESISTANCE: 10000 MOHM (AT 500V FOR ONE MINUTE)
3. MECHANICAL:
   A. DURABILITY:500 CYCLES MIN.
   B. TEMPERATURE RANGE:-40°C TO +85°C

REVISIONS

REV	DESCRIPTION	DATE	ECO	APPR
C	SEE SHEET 1	24-Jun-04	45031	HP
D	SEE SHEET 1	13-Mar-07	46462	CPM
E	SEE SHEET 1	15-Jun-07	46610	AK
F	SEE SHEET 1	19-Jun-08		SH
G	SEE SHEET 1	04-Nov-08		SH
H	ADD 0.1/RD-DM101111801S4	22-Nov-10	48356	SH
J	6.07 WAS 5.99, 2.29 WAS 1.52, 0.46 WAS 0.76 \RD-DM15042301J1	29-Apr-15	50419	HH

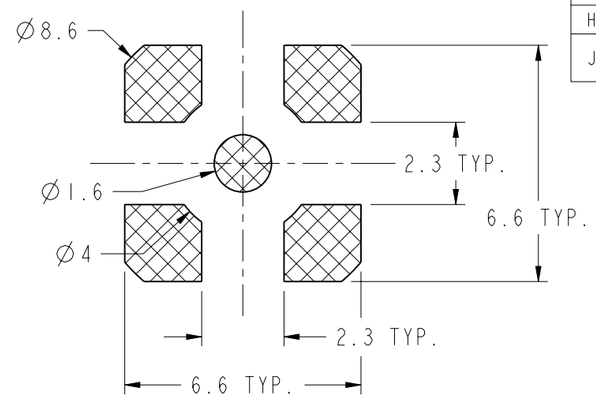

SCALE 6.000

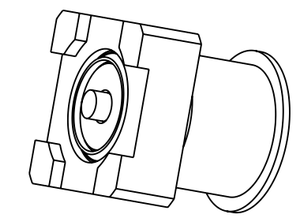

SCALE 5.000

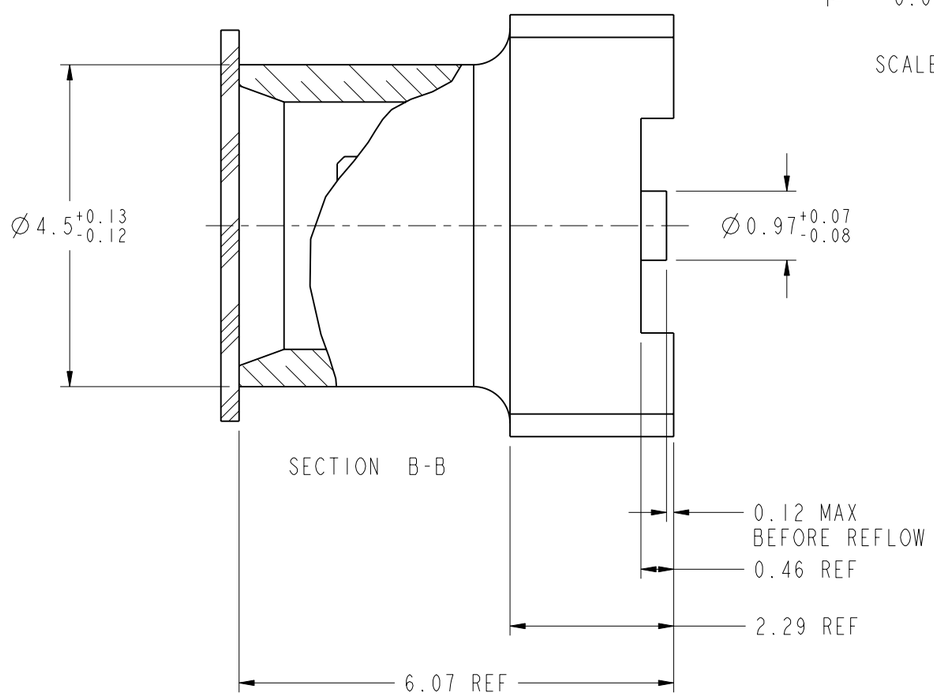

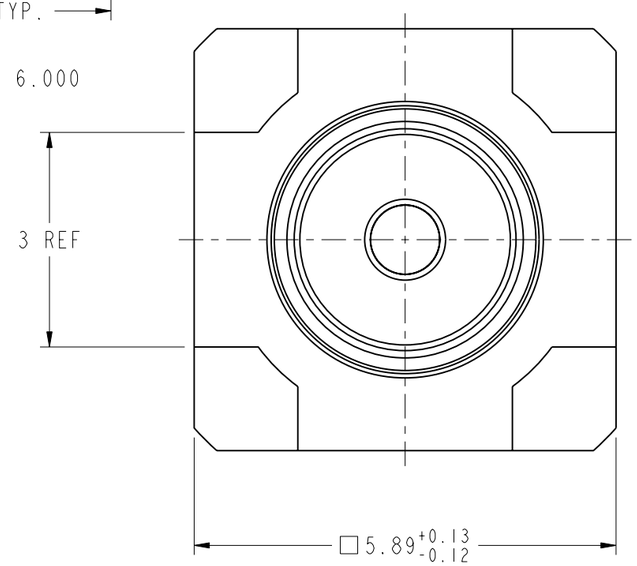

CUSTOMER OUTLINE DRAWING

ALL OTHER SHEETS ARE FOR INTERNAL USE ONLY

UNLESS OTHERWISE SPECIFIED, DIMENSIONS ARE IN METRIC AND TOLERANCES ARE:

0.5 - 6mm	6 - 30mm	30 - 120mm	ANGLES
±0.1mm	±0.2mm	± 0.3mm	±1°

NOTICE - These drawings, specifications, or other data (1) are, and remain the property of Amphenol corp. (2) must be returned upon requiest; and (3) arre confidential and not to be disclosed to any person other than those to whom they are given by Amphenol Corp. the funishing of these drawings, specifications, or other data by Amphenol Corp., or to any other person to anyone for any purpose is not to be regarded by implicatioin or otherwise in any manner licensing, granting rights to permitting such holder or any other sperson to manufacture, use or sell any product, process or design, patented or otherwsie, that may in any way be related to or disclosed by said drawings, specifications, or other data.

MATERIAL

REFERENCE
EAR 102-966929 1
MOTOROLA 0909901V01
615X-1429-100
GEN# ASSYF3_MCX

FINISH

DRAWN JEKY.C	DATE 28-Apr-15	
ENGINEER P. BRENZEL	DATE 18-Jun-98	
APPROVED H.HE	DATE 28-Apr-15	
CAD FILE 1:\MCX\919-118J-51PT		

TITLE
MCX
RECEPTACLE
SURFACE MOUNT

SCALE: 12.0:1.0	SHEET 2 OF 2	
DWG SIZE B	CODE ID 74868	REV J

Amphenol RF
Danbury CT USA, Tainan, Taiwan, Shenzhen, China
www.amphenolrf.com

DRAWING NO. 919-118J-51PT
ITEM NO. 919-118J-51PT
PART NO. 919-118J-51PT