© – TE Connectivity. All Rights Reserved.

REVISIONS					
P	LTR	DESCRIPTION	DATE	DWN	APVD
	D1	REVISED PER ECR-20-100406	16SEP2020	WH	DZ

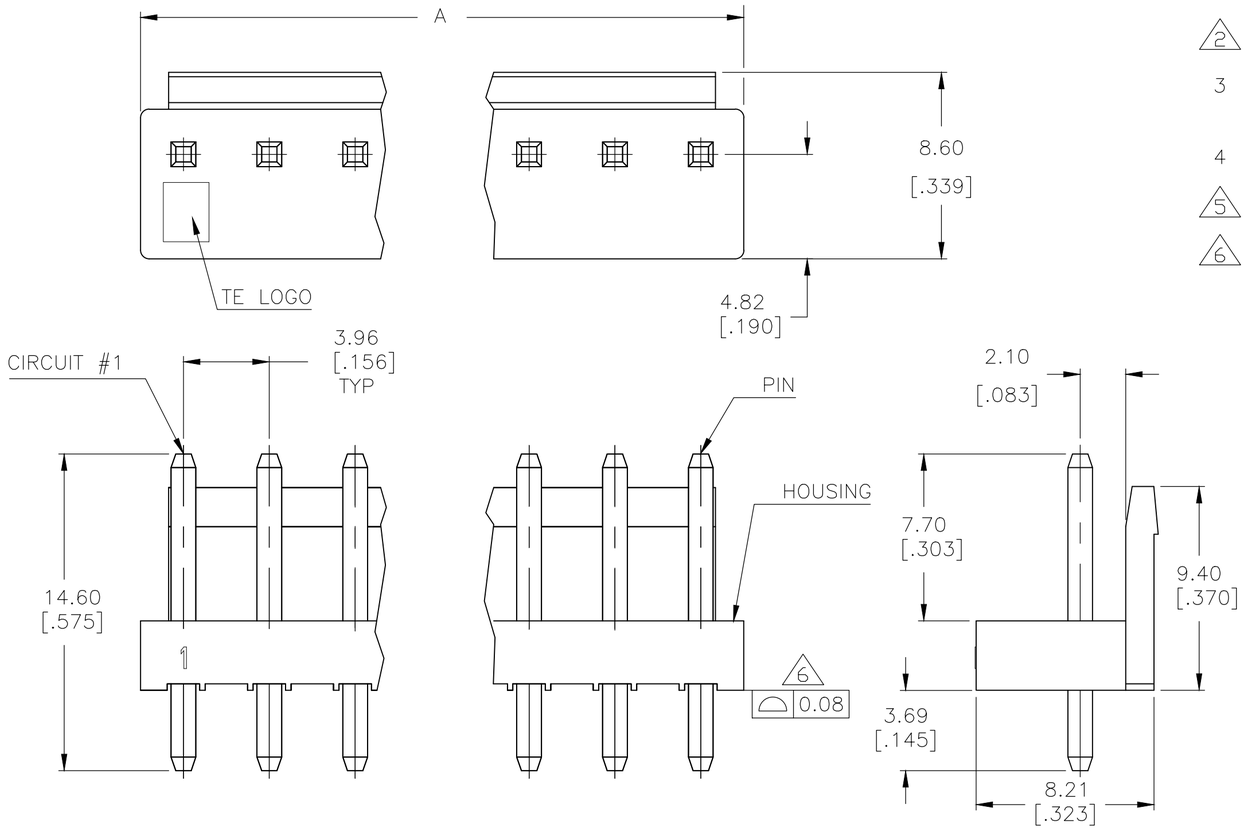

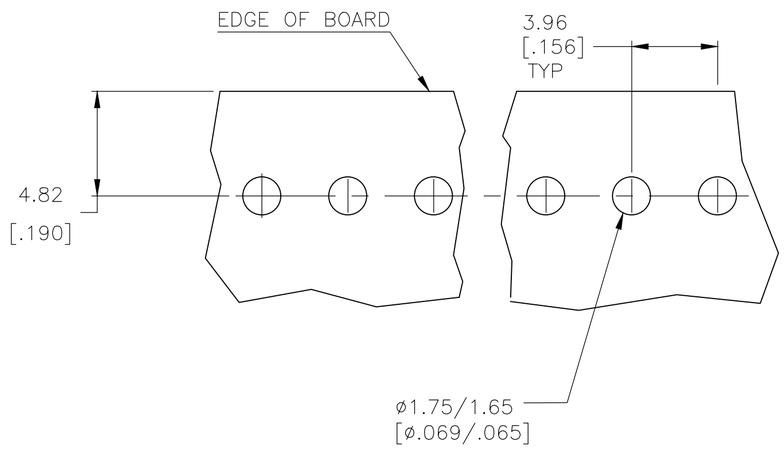

RECOMMENDED MOUNTING HOLE PATTERN
FOR 1.60 [.063] THICK PC BOARD

1. HOUSING MATERIAL: NYLON, UL94 V0.
   PIN MATERIAL: BRASS.
2. PIN PLATING: 0.003 [.000120] MIN TIN OVER 0.001 [.000039] NICKEL.
3. COMPLY WITH GLOW WIRE REQUIREMENTS FOR PARTS OF NON-METALLIC MATERIAL SUPPORTING A CURRENT-CARRYING CONNECTION DETAILED IN IEC 60335-1, SECTION 30 (GWT).
4. SKETCHES SHOW NO PINS MISSING.
5. "O" WITH POST, "X" WITHOUT POST
6. PRODUCT BOW SHOULD MEET 0~0.08MM(INITIAL) AND 0~0.20MM(AFTER SOLDERABILITY)

1	2	3	4	5	6	7	8	9	10	11	12	NO. OF POSITIONS	±0.30 [.012] DIM A	PART NUMBER
O	X	O	X	O	O	O	O					8	31.68 [1.247]	1-1744524-8
O	X	O	O	O	O	O	O	O				9	35.64 [1.403]	4-1744524-9
O	O	O	O	O	X	O	O	O				9	35.64 [1.403]	3-1744524-9
O	X	O	O	O	O	O	O	O	O	O		11	43.56 [1.715]	2-1744524-1
O	X	X	O									4	15.84 [0.624]	2-1744524-4
O	O	X	O									4	15.84 [0.624]	1-1744524-4
O	O	X	O	O	X	O	O					8	31.68 [1.247]	1744524-8
O	O	X	O	O								5	19.80 [0.780]	4-1744524-5
O	X	O	X	O	O	X	O	O				9	35.64 [1.403]	2-1744524-9
O	O	O	X	O								5	19.80 [0.780]	3-1744524-5
O	X	X	X	O								5	19.80 [0.780]	2-1744524-5
O	X	O	X	X	O							6	23.76 [0.935]	1-1744524-6
O	O	X	X	O								5	19.80 [0.780]	1-1744524-5
O	O	O	X	O	X	O						7	27.72 [1.091]	7-1744524-7
O	X	O										3	11.88 [0.468]	4-1744524-3
O	X	O	X	O	X	O	X	O				9	35.64 [1.403]	1-1744524-9
O	X	O	X	O	X	O						7	27.72 [1.091]	8-1744524-7
O	X	O	X	O	X							6	23.76 [0.935]	8-1744524-6
O	X	O	X	O	O							6	23.76 [0.935]	7-1744524-6
O	O	X	O	X	O							6	23.76 [0.935]	6-1744524-6
O	O	O	O	X	O							6	23.76 [0.935]	4-1744524-6
O	X	O	O	O	O							6	23.76 [0.935]	2-1744524-6
O	O	O	O	O	O	X	O	O				9	35.64 [1.403]	1744524-9
O	X	O	O	O	O	O						7	27.72 [1.091]	1744524-7
O	O	O	X	O	O							6	23.76 [0.935]	1744524-6
O	X	O	X	O								5	19.80 [0.780]	1744524-5
O	X	O	O									4	15.84 [0.624]	1744524-4
PIN POSITIONS 5														

1744524

THIS DRAWING IS A CONTROLLED DOCUMENT.

DIMENSIONS: mm [INCHES]

TOLERANCES UNLESS OTHERWISE SPECIFIED:
0 PLC ± –
1 PLC ± 0.5[.02]
2 PLC ± 0.30[.012]
3 PLC ± –
4 PLC ± –
ANGLES ± –

MATERIAL 1
FINISH 2

DWN JR RUTH 20MAR13
CHK TOM MICHIELUTTI 20MAR13
APVD TOM MICHIELUTTI 20MAR13
PRODUCT SPEC 108-5609
APPLICATION SPEC 114-32134
WEIGHT –

TE Connectivity

NAME HEADER ASSEMBLY-ECONOMY POWER VERTICAL –

SIZE	CAGE CODE	DRAWING NO	RESTRICTED TO
A2	00779	C-1744524	–

CUSTOMER DRAWING | SCALE N/A | SHEET 1 OF 1 | REV D1