Rev	AWO #	Description	Date	Appr
-		RELEASED	12/04/12	
A		UPDATE DRAWING	1/10/18	AY/RC1

APPROVED: _____

DATE: _____ TITLE: _____

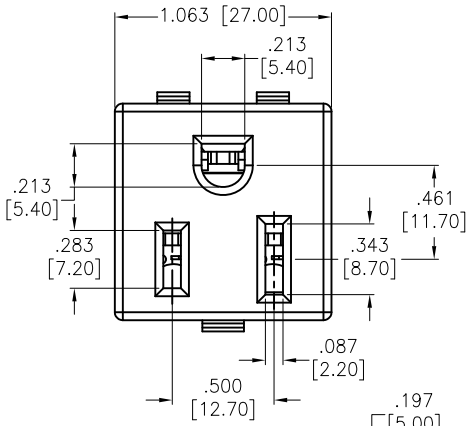

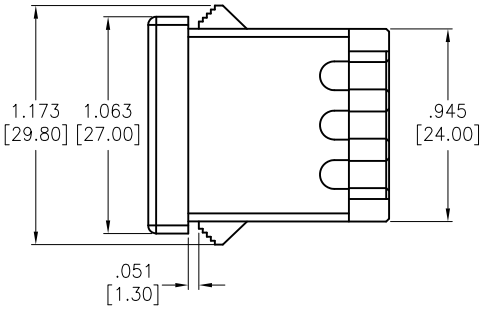

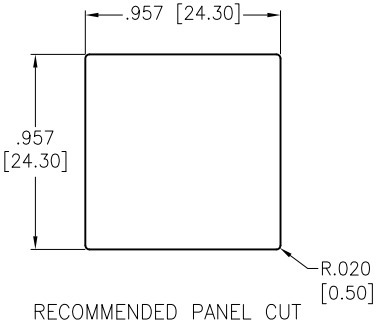

RECOMMENDED PANEL CUT

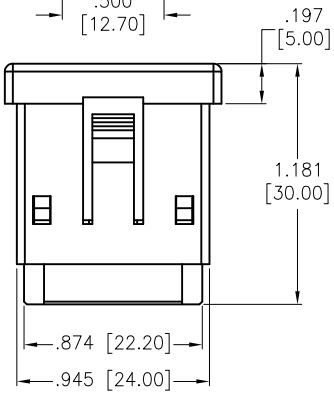

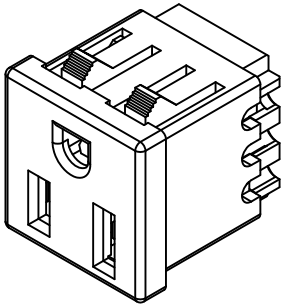

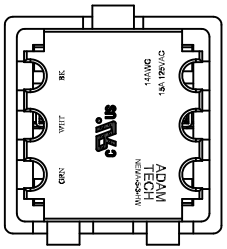

SPECIFICATIONS:
Material:
Insulator: Nylon66, rated UL 94V-0
Insulator color: Black
Contacts: Copper Alloy
Plating:
Tin over Copper underplate overall
Electrical:
Rating: 15A, 125V (C-ULus)
Insulation resistance: 100 Mohms min @ 500 VDC
Dielectric withstanding voltage: 3,000 VAC for 1 minute
Environmental:
Lead free, RoHS compliant

RoHS COMPLIANT

UNLESS OTHERWISE SPECIFIED
ALL DIMENSIONS ARE INCHES [MM]
TOLERANCES: EXCEPT AS NOTED

INCHES		HOLES	
.X	± .10	Ø.X	±.10
.XX	± .020	Ø.XX	±.015
.XXX	± .015	Ø.XXX	±.010

APPROVALS		DATE
DRAWN	TW	12/04/12
CHECKED	YC	12/04/12
APPROVED		

ADAM TECH INTERCONNECTS
909 Rahway Avenue,
Union, NJ 07083
Phone: 908-687-5000
Fax: 908-687-5710

TITLE
NEMA UNIVERSAL PANEL SNAP RECEPTACLE
HORIZONTAL WIRE

SIZE	PART NO.	REV.
X	NEMA-5-3-HW	A

REF: S00087C | SCALE: NTS | SHEET 1 OF 1