Aug.1.2023 Copyright 2023 HIROSE ELECTRIC CO., LTD. All Rights Reserved.
In case of consideration for using Automotive equipment / device which demand high reliability, kindly contact our sales window correspondents.

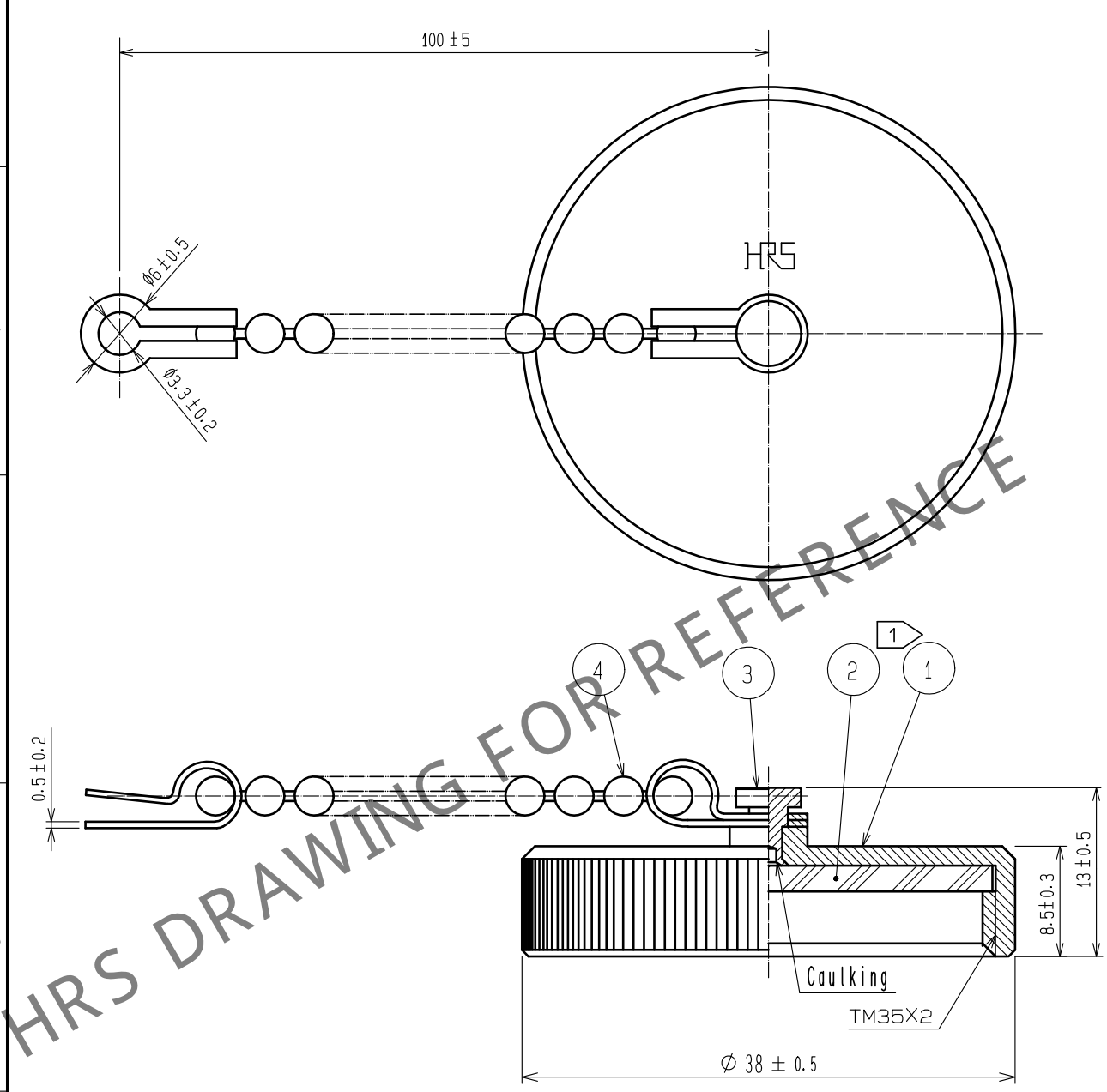

HRS DRAWING FOR REFERENCE

Notes 1. The recommended tightening of ref. ① to be 2N・m.
2. This product is a cap for RM31TR*-*(*), RM31WTR*-*(*). It is applicable regardless of given alphabets or numbers shown at *.

NO.	MATERIAL	FINISH . REMARKS	NO.	MATERIAL	FINISH . REMARKS
2	Chloroprene rubber	(Black)	4	Brass 1	Nickel plating
1	Brass 1	Nickel plating	3	Brass 1	Nickel plating

UNITS	SCALE		COUNT	DESCRIPTION OF REVISIONS	DESIGNED	CHECKED	DATE
mm	2 : 1	1	3	DIS-C-00007408	TY. SUZUKI	HY. KOBAYASHI	20210802

HIROSE ELECTRIC CO., LTD.

APPROVED	: HY. KOBAYASHI	20180222
CHECKED	: HY. KOBAYASHI	20180222
DESIGNED	: HY. KISHI	20180221
DRAWN	: MK. INOUE	20180206

DRAWING NO. EDC-003165-31-00
PART NO. RM31TR-C(31)
CODE NO. CL0109-0394-3-31
1 1/1

FORM HC0011-5-51