DRAWING MADE IN THIRD ANGLE PROJECTION

THIS DRAWING IS UNPUBLISHED. RELEASED FOR PUBLICATION ,19 .

© COPYRIGHT 19 BY AMP INCORPORATED. ALL INTERNATIONAL RIGHTS RESERVED.

MOD	LOC	DIST
8	BD	39

P	F	ZONE	LTR	DESCRIPTION	DATE	APPD
✓	✓		A	REDRAWN ON CAD	4-16-90	–

REVISIONS

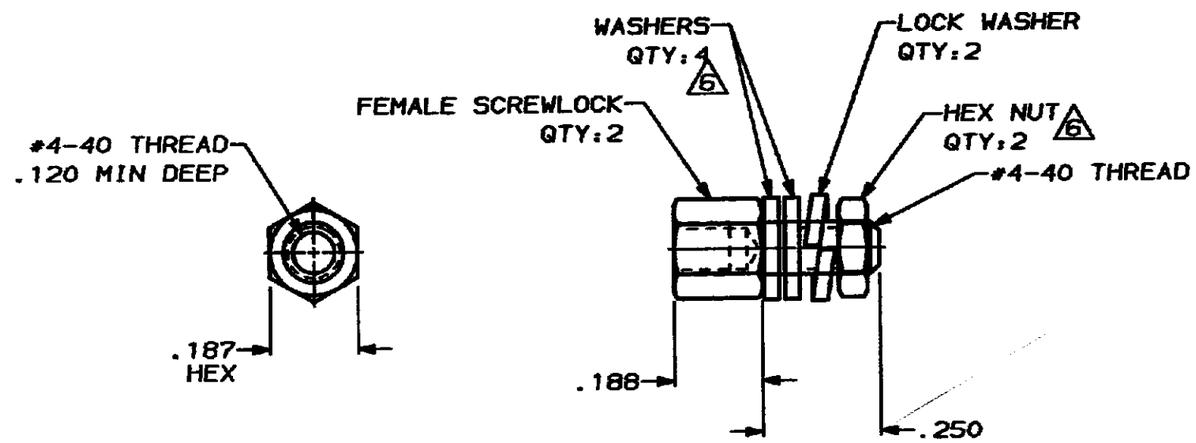

PACKAGING	FINISH	PART NUMBER
OBSOLETE △5 △6	△2	745563-5
△5	△2	745563-4
△4	△2	745563-3
△5	△1	745563-2
△4	△1	745563-1

△1 ZINC PLATED PER ASTM B633, TYPE II, CLASS SCI, YELLOW CHROMATE.

△2 ZINC PLATED PER ASTM B633, TYPE III, CLASS SCI, CLEAR CHROMATE.

3. PARTS PACKAGED UNASSEMBLED.

△4 PARTS PACKAGED AS A UNIT KIT.

△5 PARTS INDIVIDUALLY BULK PACKED & SHIPPED AS A UNIT PACKAGE.

△6 WASHERS & HEX NUTS ARE NOT INCLUDED.

DO NOT SCALE PRINT. UNLESS SPECIFIED DIMENSIONS IN INCHES TOLERANCES ON: 2 PLC DEC ± – 3 PLC DEC ± .005 ANGLES ± –

MATERIAL: STEEL PER PER A108

FINISH: SEE TABLE

DR 4-16-90 J GALLUCCI 90
CHK 4-16-90
APPD
APPD 7-16-90
PRODUCT SPEC
APPLICATION SPEC –
WEIGHT –

AMP INCORPORATED
Harrisburg, Pa. 17105

NAME: KIT, SCREWLOCK, FEMALE, PLASTIC OR METAL SERIES, SHORT, AMPLIMITE™ HDE

SIZE	FSCM NO	DRAWING NO
B	00779	745563
SCALE 4:1		SHEET 1 OF 1

CUSTOMER DRAWING

AMP 1470-15 REV 3-90