LTR	DATE	REVISION	CHK	APD
A	11/09/00	60426-RELEASE PJM		
B	06/26/01	81453D-CHG NOTE 2 & "OPAQUE HOUSING AND" TO "WITH" IN TITLE PJM		
C	02/14/06	84756D - WAS 95% TIN IN NOTE 4 TRG		
D	10/13/11	84970B-REMOVE CURRENT RATING FROM TABLE ADD RECOMMENDED MOUNTING HOLE SIZE REVISE LEAD DIMENSIONS DHM		
E	10/13/11	503434ECA-REMOVE PATENT NUMBER FROM DRAWING. OPL		

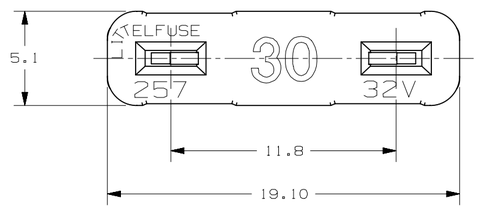

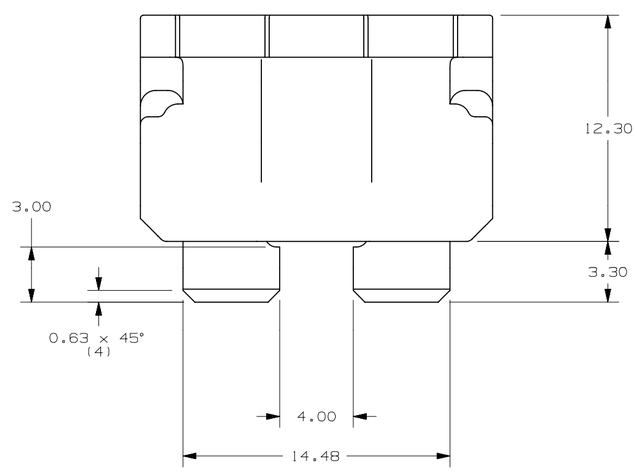

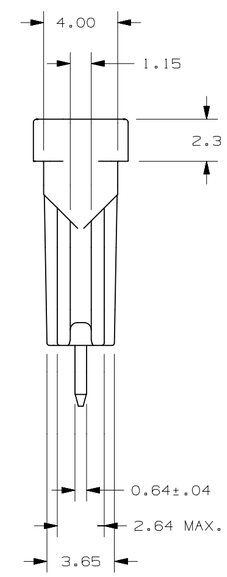

NOTES:

1. AMPERAGE RATINGS ARE MARKED IN WHITE.
2. FUSE BODY MATERIAL IS NYLON.
3. DIMENSIONS ARE SYMMETRICAL ABOUT CENTERLINES, AND ARE WITHIN ±0.13mm.
4. TERMINALS ARE ZINC AND ARE PLATED AS FOLLOWS:
   COPPER PLATING (UNDERCOAT): 40 MICRO INCHES MINIMUM.
   NICKEL PLATING (INTERMEDIATE LAYER): 100 MICRO INCHES MINIMUM.
   100% TIN PLATING (OVERCOAT): 200 MICR INCHES MINIMUM.

RECOMMENDED MOUNTING HOLE SIZE

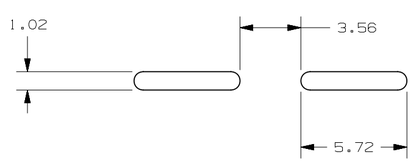

TIME CURRENT CHARACTERISTICS:

% OF RATING	BLOW TIME	
	MINIMUM	MAXIMUM
100%	4 HRS	-
135%	0.75 SEC	600 SEC

0257040.PXAPCRT	40	32	ORANGE
0257030.PXAPCRT	30	32	GREEN
LITTELFUSE PART NUMBER	AMPERE RATING	VOLTAGE RATING	BODY COLOR

METRIC
ASSEMBLY

UNLESS OTHERWISE SPECIFIED, DIMENSIONS ARE IN MILLIMETERS.
DIMENSIONS IN BRACKETS [ ] ARE INCHES

UNLESS OTHERWISE SPECIFIED, DIMENSIONS DO NOT INCLUDE PLATING.

◎	DENOTES CRITICAL CHARACTERISTICS.
CPK	DENOTES CPK DIMENSIONS, -MINIMUM CPK VALUE
ST	DENOTES A CHARACTERISTIC THAT PROVIDES AN INDICATION OF PROCESS PERFORMANCE. PROCEDURE FOR MEASUREMENT AND TRACKING TO BE DEFINED IN LITTELFUSE INSPECTION INSTRUCTIONS
CP	DENOTES CP DIMENSIONS, -MINIMUM CP VALUE MUST BE WITHIN THE DIMENSIONAL LIMITATIONS SHOWN ON DRAWING AND INITIALLY LOCATED TO ALLOW FOR MAXIMUM TOOL LIFE

COPIES TO

1	9	18
2	10	19
3	12	20
4	13	21
5	14	23
6	15	33
7	16	43
8	17	53

MATL SPEC

FINISH

DRW PJM	DATE 11/09/00	SCALE 4:1
CHK	DATE	SUPER DR
APPD	DATE	FINSH GOOD WT GRAMS/PIECE

TOLERANCE UNLESS OTHERWISE SPECIFIED
TWO PLACE DEC ±.25 FRACTION ±
THREE PLACE DEC ±.100 ANGULAR ±1°

3RD ANGLE PROJECTION

TITLE
ATO FUSE FOR PCB SOLDER APPLICATIONS WITH TRIMMED LEADS

Littelfuse®
DES PLAINES, ILLINOIS 60016

REVISION E

DRWG. NO. OUTLINE 0257000.PXAPCRT

CAD GENERATED DRAWING – NO PENCIL CHANGES ALLOWED