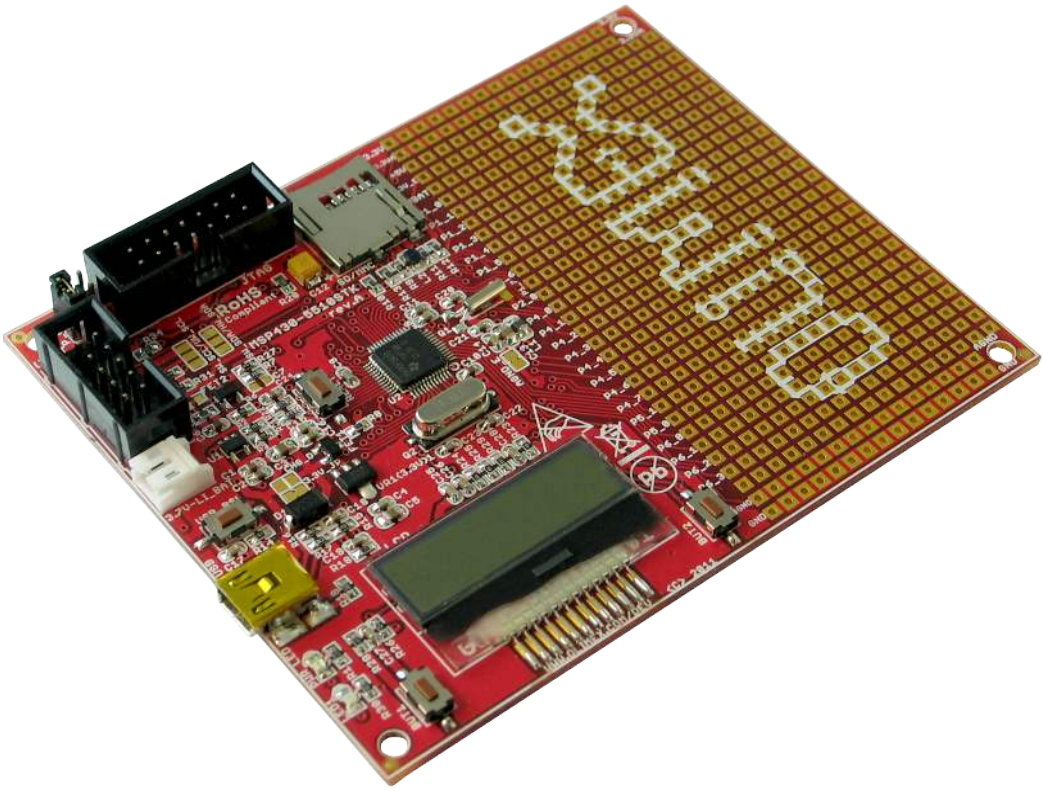

MSP430-5510STK development board
USER'S MANUAL

Revision D, September 2013
Designed by OLIMEX Ltd, 2011

lead-free

All boards produced by Olimex LTD are ROHS compliant

Disclaimer:

© 2013 Olimex Ltd. Olimex®, logo and combinations thereof, are registered trademarks of Olimex Ltd. Other terms and product names may be trademarks of others.

The information in this document is provided in connection with Olimex products. No license, express or implied or otherwise, to any intellectual property right is granted by this document or in connection with the sale of Olimex products.

Neither the whole nor any part of the information contained in or the product described in this document may be adapted or reproduced in any material from except with the prior written permission of the copyright holder.

The product described in this document is subject to continuous development and improvements. All particulars of the product and its use contained in this document are given by OLIMEX in good faith. However all warranties implied or expressed including but not limited to implied warranties of merchantability or fitness for purpose are excluded. This document is intended only to assist the reader in the use of the product. OLIMEX Ltd. shall not be liable for any loss or damage arising from the use of any information in this document or any error or omission in such information or any incorrect use of the product.

This evaluation board/kit is intended for use for engineering development, demonstration, or evaluation purposes only and is not considered by OLIMEX to be a finished end-product fit for general consumer use. Persons handling the product must have electronics training and observe good engineering practice standards. As such, the goods being provided are not intended to be complete in terms of required design-, marketing-, and/or manufacturing-related protective considerations, including product safety and environmental measures typically found in end products that incorporate such semiconductor components or circuit boards.

Olimex currently deals with a variety of customers for products, and therefore our arrangement with the user is not exclusive. Olimex assumes no liability for applications assistance, customer product design, software performance, or infringement of patents or services described herein.

THERE IS NO WARRANTY FOR THE DESIGN MATERIALS AND THE COMPONENTS USED TO CREATE MSP430-5510STK. THEY ARE CONSIDERED SUITABLE ONLY FOR MSP430-5510STK.

Thank you for purchasing MSP430-5510STK development board assembled by OLIMEX LTD.

Table of Contents

CHAPTER 1: OVERVIEW....5
1. Introduction to the chapter....5
1.1 Features....5
1.2 Organization....5
CHAPTER 2: SETTING UP THE MSP430-5510STK BOARD....7
2. Introduction to the chapter....7
2.1 Electrostatic warning....7
2.2 Requirements....7
2.3 Powering the board....7
2.4 Prebuilt software....8
2.5 Bootloader mode....8
CHAPTER 3: MSP430-5510STK BOARD DESCRIPTION....9
3. Introduction to the chapter....9
3.1 Layout (top view)....9
CHAPTER 4: THE MSP430F5510 MICROCONTROLLER....10
4. Introduction to the chapter....10
4.1 The microcontroller....10
CHAPTER 5 CONTROL CIRCUITY....11
5. Introduction to the chapter....11
5.1 Reset....11
5.2 Clocks....11
CHAPTER 6: HARDWARE....12
6. Introduction to the chapter....12
6.1 Battery connector....12
6.2 JTAG connector....12
6.3 UEXT....13
6.4 Pads on the proto area....14
6.5 USB mini connector....15
6.6 SD/MMC slot....15
6.7 Jumper description....15
6.8 LCD Display....16
6.9 Additional hardware components....17
CHAPTER 7: MEMORY AND BLOCK DIAGRAM....18
7. Introduction to the chapter....18
7.1 Memory organization....18
CHAPTER 8: SCHEMATICS....19
8. Introduction to the chapter....19

8.1 Eagle schematic.....19
8.2 Physical dimensions.....21
CHAPTER 9: REVISION HISTORY.....22
9. Introduction to the chapter.....22
9.1 Document revision.....22
9.2 Web page of your device.....23
9.3 Product support.....24

CHAPTER 1: OVERVIEW

1. Introduction to the chapter

Thank you for choosing the MSP430-5510STK development board from Olimex! This document provides a User's Guide for the Olimex MSP430-5510STK development board. As an overview, this chapter gives the scope of this document and lists the board's features. The document's organization is then detailed.

The MSP430-5510STK development board enables code development of applications running on the MSP430F5510 microcontroller, manufactured by Texas Instruments.

1.1 Features

- MCU **MSP430F5510** with 32K Bytes Program Flash, 4K Bytes RAM, 25Mhz **LCD** display 8 alphanumeric
- **micro SD** card connector
- **Li-Po battery** on-board charger
- **USB** connector, and USB bootloader support
- two buttons
- 2 status **LEDs**
- access to every pin near prototype area
- **Reset** button
- UEXT connector that allows other Olimex's modules (MOD-MP3, MOD-NRF24L01, etc.) to be connected
- **JTAG** connector
- JTAG **Power_In** and **Power_Out** jumpers
- **32 768 Hz** oscillator crystal
- **4 Mhz** crystall oscillator
- Power supply voltage regulators and filtering capacitor
- Power on Led
- PCB: FR-4, 1.5 mm (0,062"), soldermask, white silkscreen component print
- Dimensions: 100x 80mm (3.94x 3.14")

1.2 Organization

Each section in this document covers a separate topic, organized as follow:

- Chapter 1 is an overview of the board usage and features
- Chapter 2 provides a guide for quickly setting up the board
- Chapter 3 contains the general board diagram and layout
- Chapter 4 describes the component that is the heart of the board: the MSP430F5510 microcontroller
- Chapter 5 is an explanation of the control circuitry associated with the microcontroller to reset. Shows the clocks located on the board.

- Chapter 6 covers the connector pinout, peripherals and jumper description
- Chapter 7 shows the processor diagram and memory map
- Chapter 8 provides the schematics
- Chapter 9 contains the revision history

CHAPTER 2: SETTING UP THE MSP430-5510STK BOARD

2. Introduction to the chapter

This section helps you set up the MSP430-5510STK development board for the first time.
Please consider first the electrostatic warning to avoid damaging the board, then discover the hardware and software required to operate the board.
The procedure to power up the board is given, and a description of the default board behavior is detailed.

2.1 Electrostatic warning

MSP430-5510STK is shipped in a protective anti-static package. The board must not be exposed to high electrostatic potentials. A grounding strap or similar protective device should be worn when handling the board. Avoid touching the component pins or any other metallic element.

2.2 Requirements

In order to set up the MSP430-5510STK, the following items are required:

- A source of power – the board can be powered through the mini USB connector (standard 5V), through the JTAG connector (by the debugger/programmer) or via a 3.7Li-Po battery.

- Programmer supporting 14 pin JTAG interface and the used microcontroller MSP430F5510.

All our MSP programmers are recommended with MSP430-5510STK:
- Olimex MSP430-JTAG-TINY-V2 - mini emulator/programmer USB<->JTAG 14p with powering capabilities
- Olimex MSP430-JTAG-ISO-MK2 – emulator/debugger with additional stand-alone read/write mode, power profiling and software support for most MSP430 integrated environments and operating systems.

Additionally any MSP430 compatible debugger should be compatible with the 14p connector of the board. The MSP430F5510 microcontroller lacks SWD interface.

Also, a host-based software toolchain is required in order to program/debug the MSP430-5510STK board. There are also a number of ready IDEs available like IAR Embedded Workbench, Rowley CrossWorks, Code Composer Studio, etc.

We also provide our own flash programming software which can be distributed free. You can find it at the device web page.

2.3 Powering the board

There are three ways of powering the board: via the USB; via the debugger from the JTAG connector or via a 3.7V Li-Po battery connected to the respective connector.

-Plug mini USB with at least 5V to the board OR connect a charged 3.7V Li-Po battery to the respective connector
OR
-Set the jumpers P_IN closed, P_OUT open so you can power from JTAG connector

On powering the board via USB the PWR LED, LED1 and the display should turn on.
On powering the board via JTAG the LED1 and the display should turn on.

The board has a Li-Po charger. This means that when a Li-Po battery is plugged in the battery connector and there is additional source of power applied (USB or JTAG) the battery will begin to charge (making the overall current draw of the board higher).

2.4 Prebuilt software

On powering the board via the USB the PWR LED should turn on. The LED1 should blink green and the LCD should show the message: “OLIMEX”.

2.5 Bootloader mode

To enter bootloader mode press USB_BSL button and then plug the board. You will also need the correct bootloader software which is available at Texas Instruments web site in the USB Developer Package. We have tested MSP430_USB_Firmware_Upgrade_Example-1.2.1-Setup.exe.

CHAPTER 3: MSP430-5510STK BOARD DESCRIPTION

3. Introduction to the chapter

Here you get acquainted with the main parts of the board. Note the names used on the board differ from the names used to describe them. For the actual names check the MSP430-5510STK board itself.

3.1 Layout (top view)

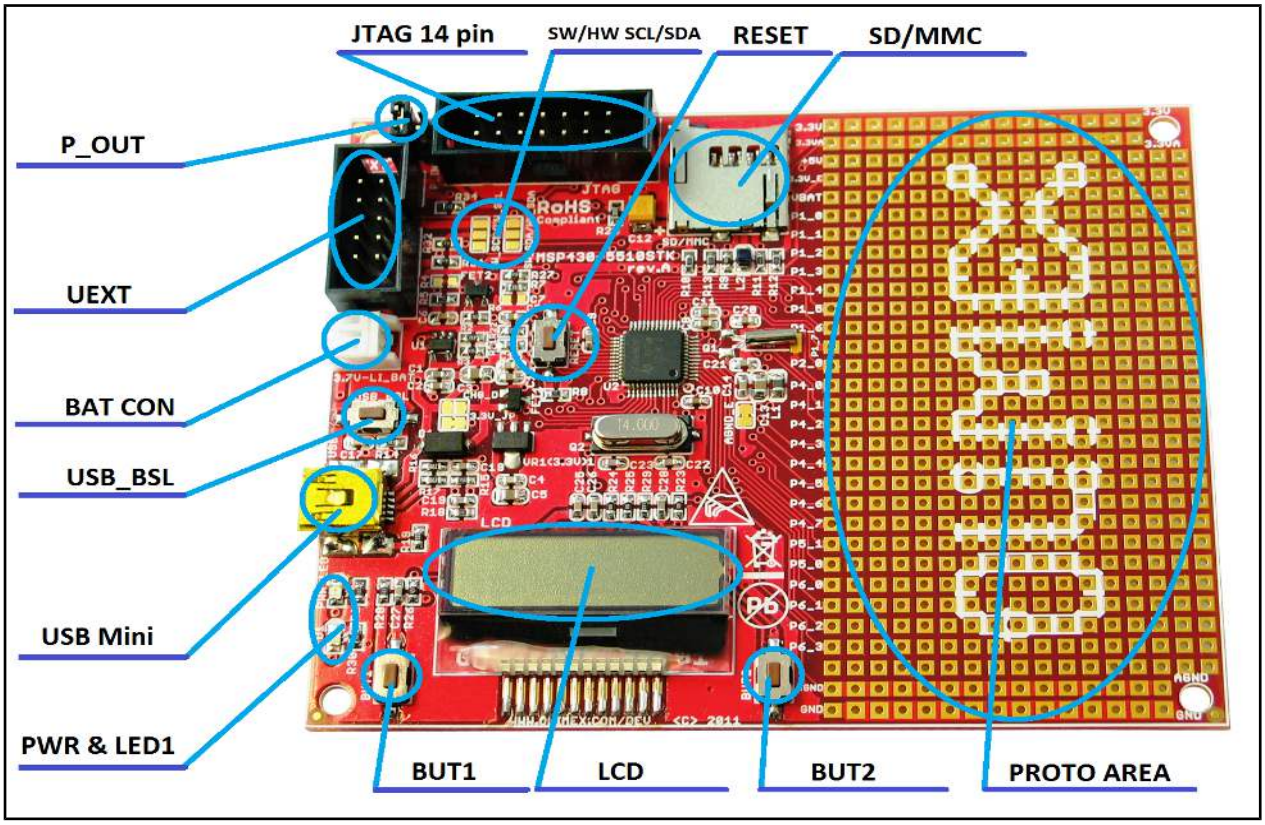

CHAPTER 4: THE MSP430F5510 MICROCONTROLLER

4. Introduction to the chapter

In this chapter is located the information about the heart of MSP430-5510STK – its microcontroller. The information is a modified version of the datasheet provided by its manufacturers.

4.1 The microcontroller

Main processors features:

- Low Supply-Voltage Range, 1.8 V to 3.6 V
- Ultra-Low Power Consumption
  - ✗ Active Mode (AM)
    All System Clocks Active:
    - 195 µA/MHz at 8 MHz, 3 V, Flash Program Execution (Typical)
    - 115 µA/MHz at 8 MHz, 3 V, RAM Program Execution (Typical)
  - ✗ Standby Mode (LPM3)
    - Real Time Clock With Crystal, Watchdog, and Supply Supervisor Operational, Full RAM Retention, Fast Wake-Up: 1.9 µA at 2.2 V, 2.1 µA at 3 V (Typical)
    - Low-Power Oscillator (VLO), General-Purpose Counter, Watchdog, and Supply Supervisor Operational, Full RAM Retention, Fast Wake-Up: 1.4 µA at 3 V (Typical)
  - ✗ Off Mode (LPM4)
    Full RAM Retention, Supply Supervisor Operational, Fast Wake-Up: 1.1 µA at 3 V (Typical)
  - ✗ Shutdown Mode (LPM4.5)
    0.18 µA at 3 V (Typical)
- Wake-Up From Standby in Less Than 5 µs
- 16-Bit RISC Architecture, Extended Memory, Up to 25-MHz System Clock
- Flexible Power Management System
  - ✗ Fully Integrated LDO With Programmable Regulated Core Supply Voltage
  - ✗ Supply Voltage Supervision, Monitoring, and Brownout
- Unified Clock System:
  - ✗ FLL Control Loop for Frequency Stabilization
  - ✗ Low-Power Low-Frequency Internal Clock Source (VLO)
  - ✗ Low-Frequency Trimmed Internal Reference Source (REFO)
  - ✗ 32-kHz Watch Crystals (XT1)

For comprehensive information on the microcontroller visit the Texas Instruments web page for a datasheet.

At the moment of writing the microcontroller datasheet can be found at the following link:
http://www.ti.com/lit/ds/slas645f/slas645f.pdf

CHAPTER 5 CONTROL CIRCUITY

5. Introduction to the chapter

Here you can find information about reset circuit, power circuit and quartz crystal locations.

5.1 Reset

MSP430-5510STK reset circuit includes R7 (33 KΩ), R8(330 Ω), MSP430F5510 pin 48 (RST/NMI/SBWTTDIO) and a RESET button.

5.2 Clocks

Real time clock (RTC) Q1 is connected to pins 8 and 9 of the processor.

4 MHz quarz crystal Q2 is found at pins 45 and 46 of the processor.

CHAPTER 6: HARDWARE

6. Introduction to the chapter

In this chapter are presented the connectors that can be found on the board all together with their pinout. Proto area is shown. Jumpers functions are described. Notes and info on specific peripherals are presented. Notes regarding the interfaces are given.

6.1 Battery connector

The battery connector is used only to charge 3.7V Lithium batteries. It cannot be used to power the board.

Pin #	Signal name
1	VBAT
2	GND

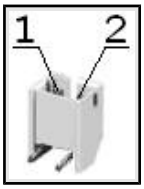

6.2 JTAG connector

The 14 pin JTAG connector provides the interface for JTAG programming/debugging. The pinout can be found in the table below.

JTAG connector			
Pin #	Signal name	Pin #	Signal name
1	TDO	8	TEST
2	P_IN	9	GND
3	TDI	10	Not connected
4	P_OUT	11	#RST
5	TMS	12	Not connected
6	Not connected	13	Not connected
7	TCK	14	Not connected

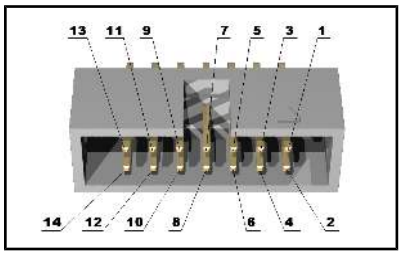

6.3 UEXT

MSP430-5510STK board has UEXT connector and can interface Olimex's UEXT modules.
For more information on UEXT please visit:

https://www.olimex.com/Products/Modules/UEXT/

Pin #	Signal name
1	+3.3V
2	GND
3	TX
4	RX
5	SCL
6	SDA
7	SOMI
8	SIMO
9	CLK
10	STE

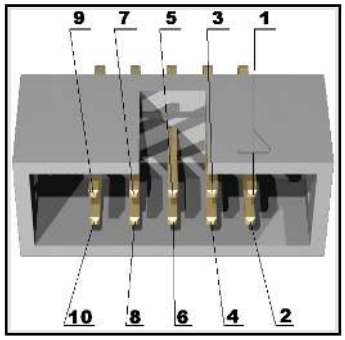

6.4 Pads on the proto area

For your convenience the pads are named individually near each of them. Please take extra care about the numbering but consider that there might be offset.

Pad name	Signal
3.3V	3.3V row of pads
3.3VA	3.3VA row of pads
+5V	+5V
3.3V_E	3.3V_E
VBAT	V battery
P1_0	BUT1
P1_1	RS(display)
P1_2	RW(display)
P1_3	E(display)
P1_4	DB4(display)
P1_5	DB5(display)
P1_6	DB6(display)
P1_7	DB7(display)
P2_0	BUT2
P4_0	STE
P4_1	SIMO
P4_2	SOMI
P4_3	CLK
P4_4	TXD
P4_5	RXD
P4_6	CS(SD/MMC)
P4_7	LED1
P5_0	E_BAT_MEASURE
P5_1	PWR_LCD
P6_0	BAT
P6_1	STNB_E
P6_2	SCL_UEXT
P6_3	SDA_UEXT
-	-

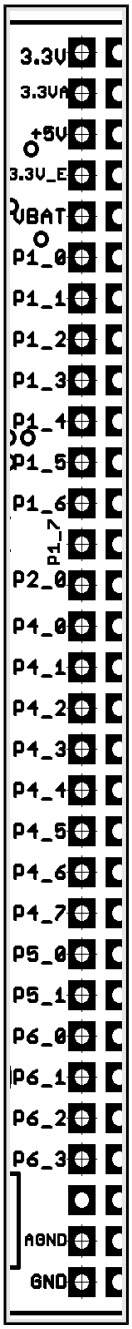

AGND	Analog GND row of pads
GND	GND row of pads

6.5 USB mini connector

Pin #	Signal name
1	+5V
2	D-
3	D+
4	Not connected
5	GND

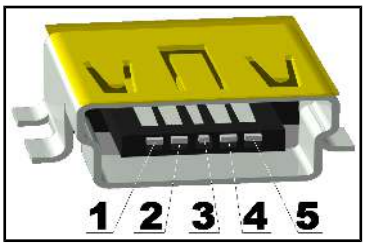

6.6 SD/MMC slot

Pin #	Signal name
1	DAT2
2	DAT3/CS
3	CMD/DI
4	VDD
5	CLK/SCLK
6	VSS
7	DAT0/DO
8	DAT1

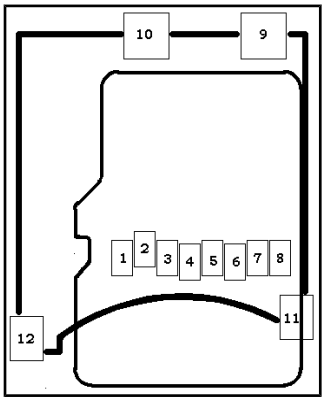

6.7 Jumper description

P_OUT/P_IN

This jumper controls power on pins 2 and 4 of the JTAG connector. When in P_OUT is closed 3.3V can be measured at pin 4.

Check the schematic for more info.

Default position is P_OUT – closed, P_IN - open.

3.3V_JP

If open open stops processor and proto area pads powering.

Default state is closed.

SW_SCL/HW_SCL; SW_SDA/HW_SDA

These two jumpers control whether the SCL and SDA signals to be implemented on software or hardware level. When in position SW_SCL/SW_SDA software implementation.

Default position is SW_SCL; SW_SDA.

CHG_D

If closed stops the battery charger.

Default state is open.

AGND_E

Analog GND is disabled if open.
If closed Analog GND is enabled.

Default state is closed.

6.8 LCD Display

8 characters alphanumeric LCD display.

6.9 Additional hardware components

The components below are mounted on MSP430-5510STK but are not discussed above. They are listed here for completeness:

2 buttons + RST button

LED + power-on LED

CHAPTER 7: MEMORY AND BLOCK DIAGRAM

7. Introduction to the chapter

Below is located the block diagram of the processor and on the next page you can find a memory map for this family of processors. It is strongly recommended to refer to the original datasheet released by Texas Instruments for ones of higher quality.

7.1 Memory organization

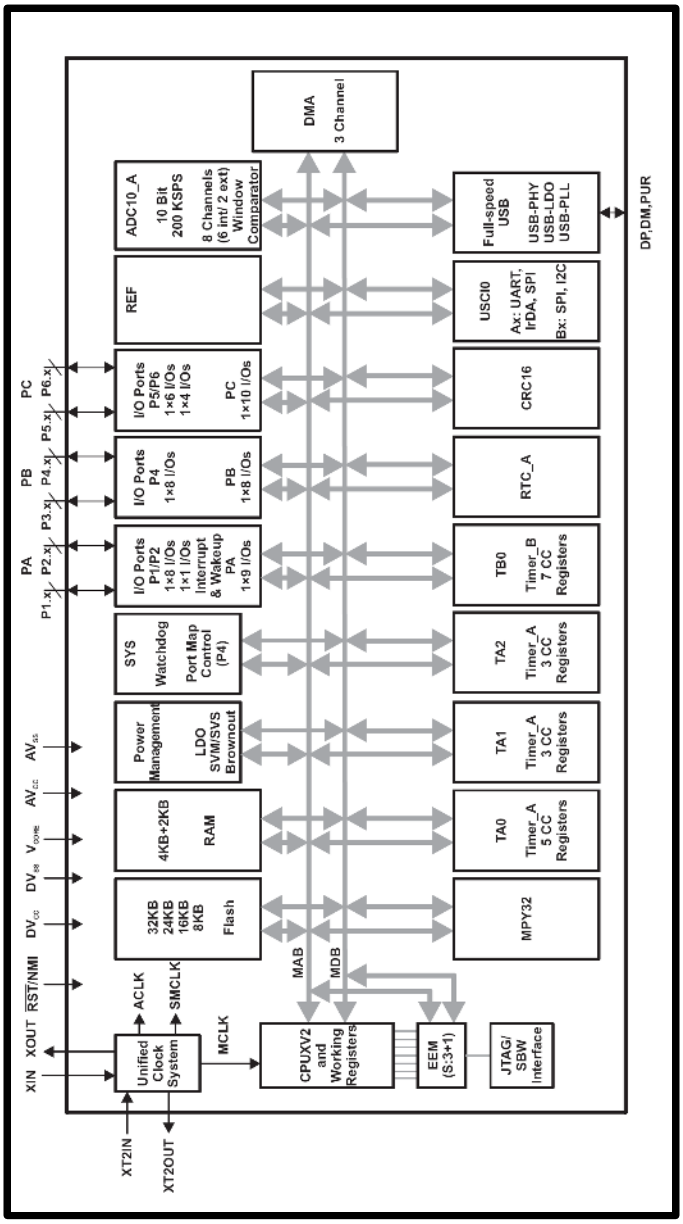

CHAPTER 8: SCHEMATICS

8. Introduction to the chapter

In this chapter are located the schematics describing logically and physically MSP430-5510STK.

8.1 Eagle schematic

MSP430-5510STK schematic is visible for reference here. You can also find them on the web page for MSP430-5510STK at our site: https://www.olimex.com/Products/MSP430/Starter/MSP430-5510STK/. They are located in HARDWARE section.

The EAGLE schematic is situated on the next page for quicker reference.

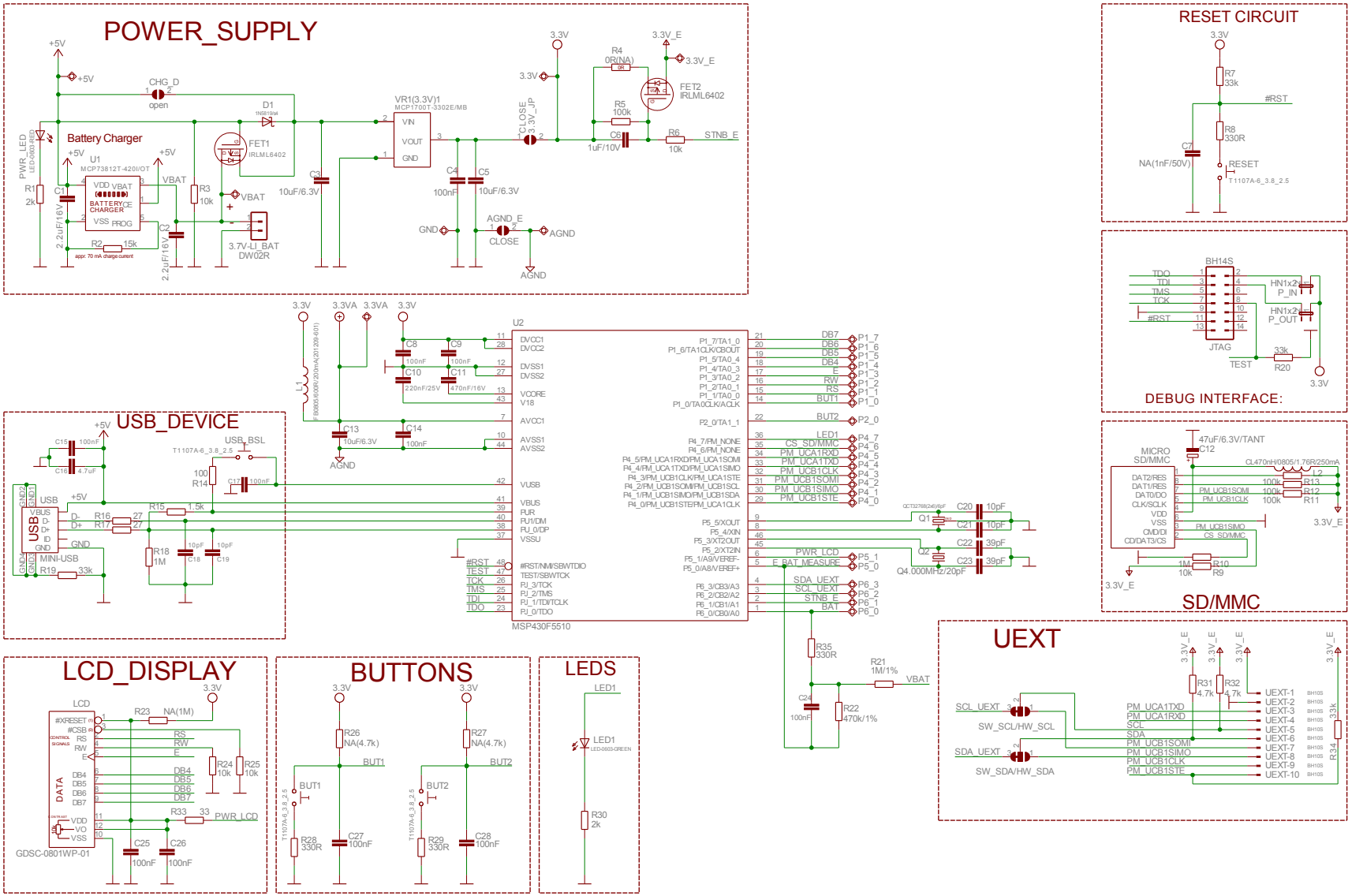
POWER_SUPPLY
Battery Charger
RESET CIRCUIT
DEBUG INTERFACE:
USB_DEVICE
SD/MMC
UEXT
LCD_DISPLAY
BUTTONS
LEDS
MSP430F5510

8.2 Physical dimensions

Note that all dimensions are in inches.

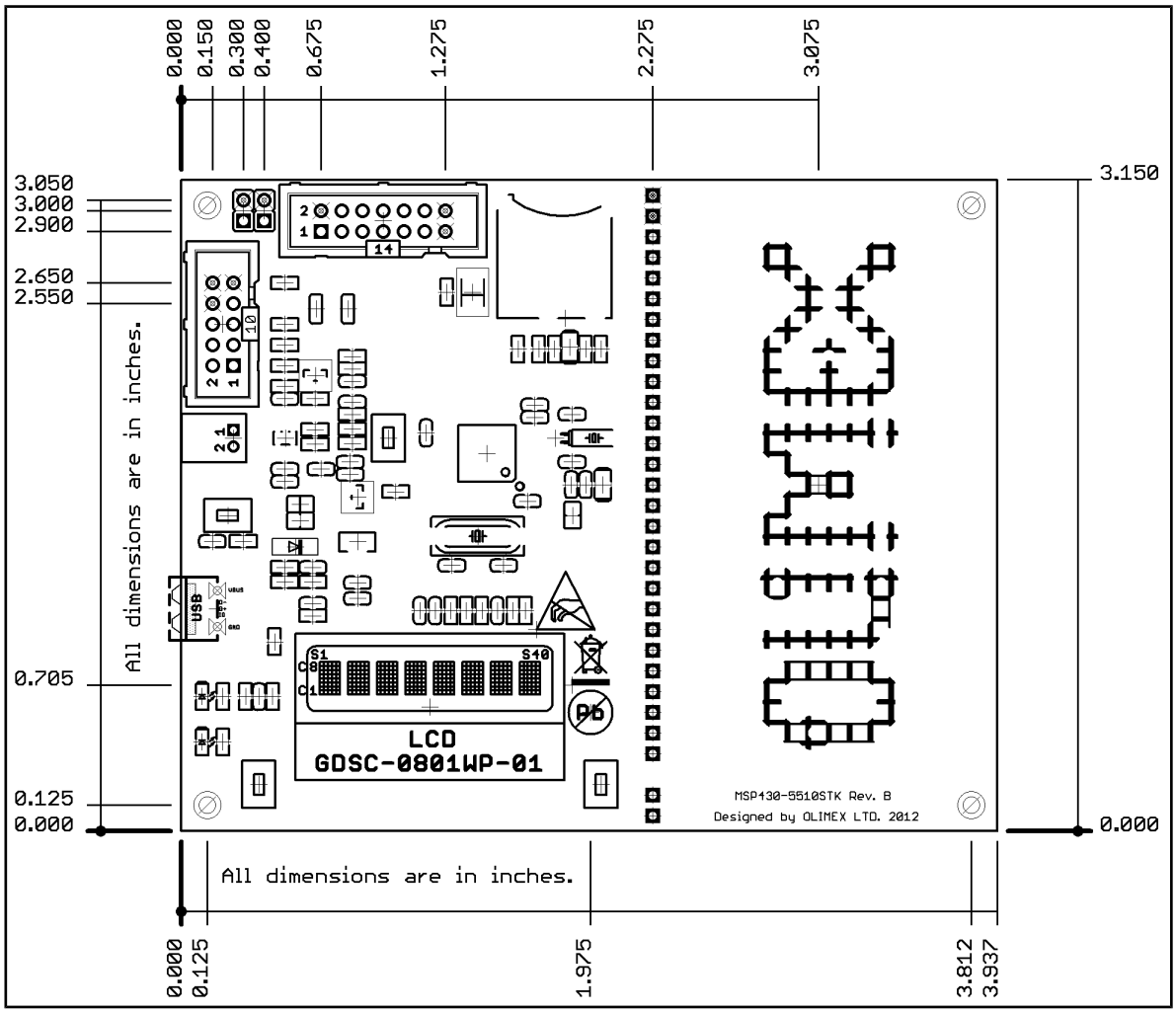

CHAPTER 9: REVISION HISTORY

9. Introduction to the chapter

In this chapter you will find the current and the previous version of the document you are reading. Also the web-page for your device is listed. Be sure to check it after a purchase for the latest available updates and examples.

9.1 Document revision

Revision	Changes	Modified Pages
A	Initial Creation	All
B	Added “product support” page Changed schematic with a searchable one Changed underlining of sections Adjusted disclaimer page Added links in the contents section Fixed external links	All
C	Fixed errors about the powering options Added info about the bootloader	7, 8, 13
D	Fixed error about battery connector powering Updated the list of available Olimex debuggers Few document style changes Updated “warranty and returns” page	7, 8, 23,24

9.2 Web page of your device

The web page you can visit for more info on your device is https://www.olimex.com/Products/MSP430/Starter/MSP430-5510STK/. There you can find more info and some examples.

ORDER CODES:

MSP430-5510STK - completely assembled and tested

MSP430-JTAG-TINY-V2 - mini emulator/programmer USB<->JTAG 14p with powering capabilities
MSP430-JTAG-ISO-MK2 – emulator/debugger with additional stand-alone read/write mode, power profiling and software support for most MSP430 integrated environments and operating systems

How to order?

You can order directly from our web-shop or via any of our distributors.

Check our webpage https://www.olimex.com/ for more info.

9.3 Product support

For product support, hardware information and error reports mail to: support@olimex.com. All document or hardware feedback is welcome. Note that we are primarily a hardware company and our software support is limited. Please consider reading the paragraph below about the warranty of Olimex products.

All goods are checked before they are sent out. In the unlikely event that goods are faulty, they must be returned, to OLIMEX at the address listed on your order invoice.

OLIMEX will not accept goods that have clearly been used more than the amount needed to evaluate their functionality.

If the goods are found to be in working condition, and the lack of functionality is a result of lack of knowledge on the customers part, no refund will be made, but the goods will be returned to the user at their expense.

All returns must be authorized by an RMA Number. Email support@olimex.com for authorization number before shipping back any merchandise. Please include your name, phone number and order number in your email request.

Returns for any unaffected development board, programmer, tools, and cables permitted within 7 days from the date of receipt of merchandise. After such time, all sales are considered final.

Returns of incorrect ordered items are allowed subject to a 10% restocking fee. What is unaffected? If you hooked it to power, you affected it. To be clear, this includes items that have been soldered to, or have had their firmware changed. Because of the nature of the products we deal with (prototyping electronic tools) we cannot allow returns of items that have been programmed, powered up, or otherwise changed post shipment from our warehouse.

All returned merchandise must be in its original mint and clean condition. Returns on damaged, scratched, programmed, burnt, or otherwise 'played with' merchandise will not be accepted.

All returns must include all the factory accessories which come with the item. This includes any In-Circuit-Serial-Programming cables, anti-static packing, boxes, etc.

With your return, enclose your PO#. Also include a brief letter of explanation of why the merchandise is being returned and state your request for either a refund or an exchange. Include the authorization number on this letter, and on the outside of the shipping box.

Please note: It is your responsibility to ensure that returned goods reach us. Please use a reliable form of shipping. If we do not receive your package we will not be held liable.

Shipping and handling charges are not refundable. We are not responsible for any shipping charges of merchandise being returned to us or returning working items to you.

The full text might be found at https://www.olimex.com/wiki/GTC#Warranty for future reference.