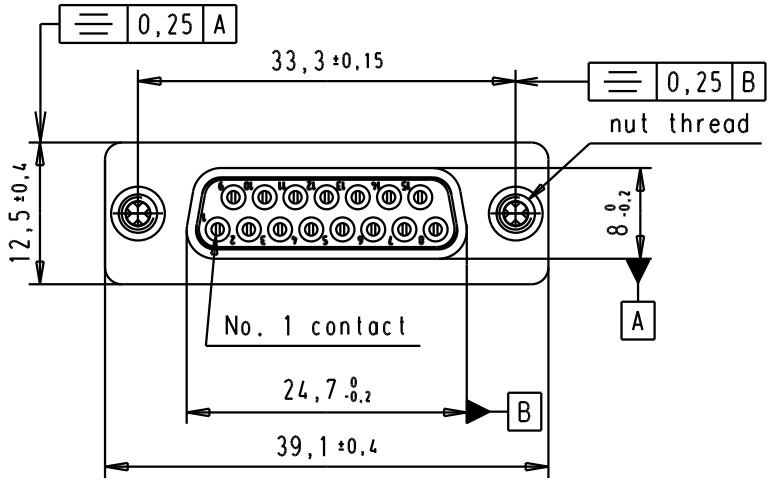

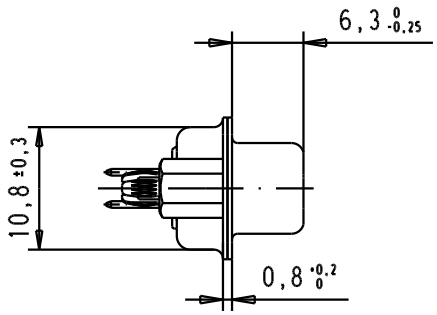

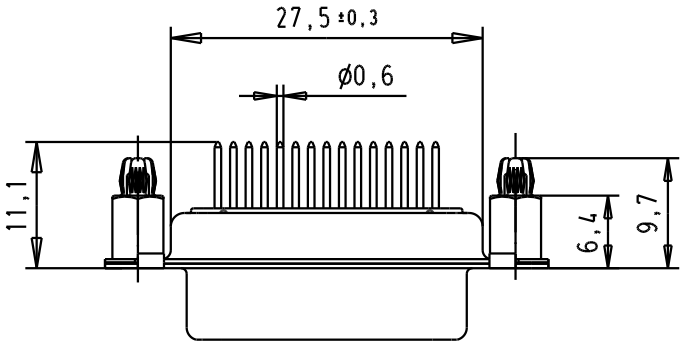

PCB Layout, component side,
PCB thickness 1,6 mm

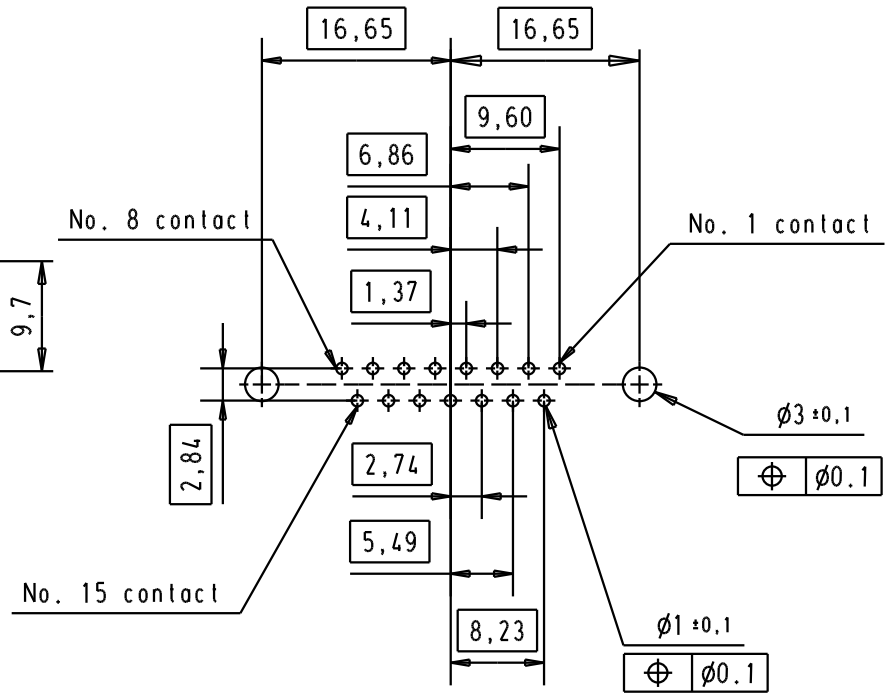

SPECIFICATION

Mating Cycles	500
Filter type	C
Capacitance	1000pf ±20%
Working Voltage	100v
Current Rating	7.5A
Insulation Resistance	>1GΩ

FREQUENCY (MHz)	ATTENUATION (dB)
5	1dB
10	3dB
50	12dB
100	20dB
500	34dB
1000	30dB

09642127236	M3		33079	29/08/05	JMDR
09642127235	UNC 4-40		31058	8-JUL-02	CV
Part number	Nut thread		Mod.	Dat.	Name

	Dat.	Name
Detail.	8-JUL-02	CV
Insp.		
Stand.		

All Dim. in mm
Orig. Size DIN A 4

D-Sub, female, straight, 15 Poles, solder pins, tin plated shell with spacer nuts and board-locks

Ma?Mstab/ Scale: 1.5:1

HARTING EURL
F-95972 Paris

TB 0964212723x

Sub.

Blatt/ Page 2/3