SMA 50 Ohm
Straight Crimp Type Bulkhead Jack - Captivated Contact

INCHES (MILLIMETERS)
CUSTOMER DRAWINGS AVAILABLE UPON REQUEST

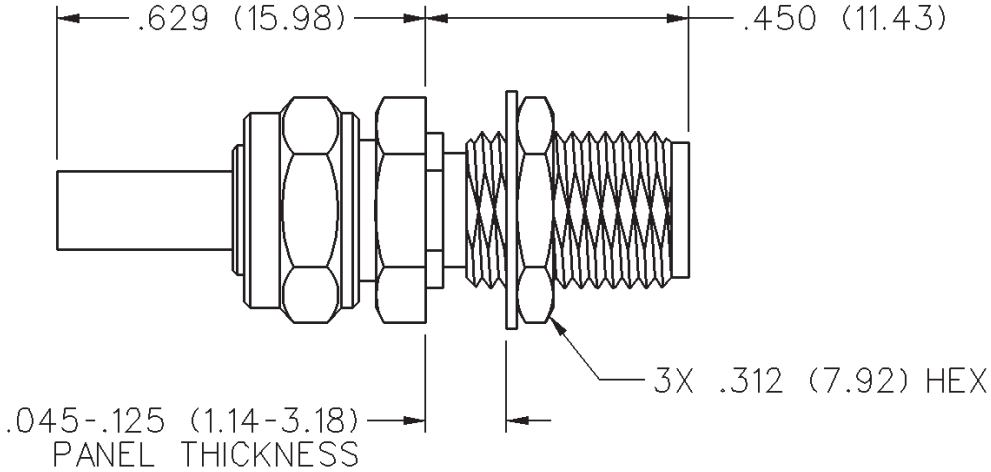

CABLE TYPE	VSWR & FREQ. RANGE	GOLD PLATED	NICKEL PLATED
RG-161/U, 174,188, 316	1.15 + .02 f (GHz) 0-12.4 GHz	142-0303-401	142-0303-406

Mounting hole layout

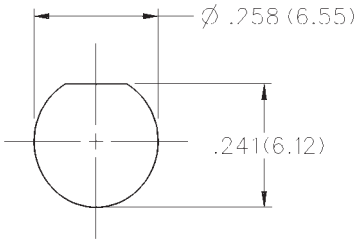

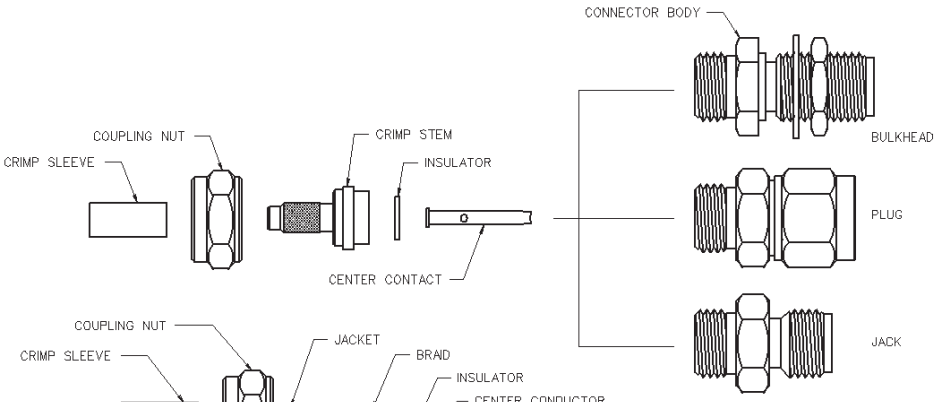

CABLE GROUP	PART NUMBER	CRIMP HEX
RG-316/u, 161, 174, 188	142-0303-401	.128 (3.25)
	142-0303-406	.128 (3.25)

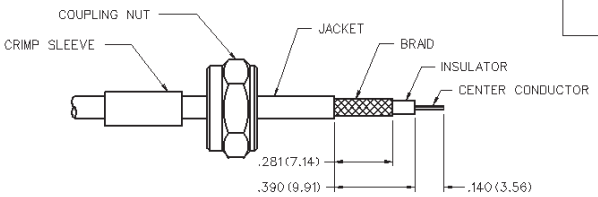

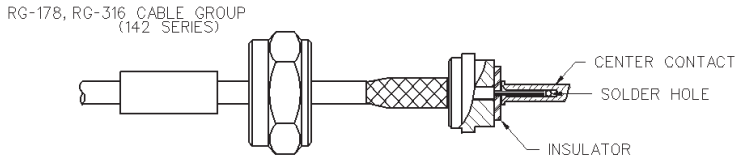

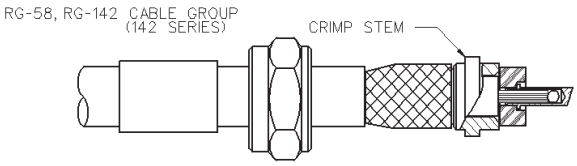

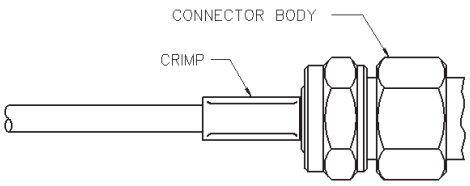

1. Identify connector parts. (6 piece parts - except bulkhead)
2. Strip cable to dimensions shown. Do not nick braid or center conductor. A wire stripper of correct size is recommended for this step. Twist stranded center conductor into tight bundle and tin (optional). Slide crimp sleeve, nut and heat shrink tubing (as applicable) onto cable as shown.
3. Flare braid and slide cable into crimp stem. Place rear insulator and center contact over center conductor and position as shown for different cable sizes. Solder center conductor to contact through the solder hole. Solder **must not** be allowed to gather and run on outside of contact. Use a minimum amount of solder for a good joint. **.020 (0.51) diameter solder is recommended**.
4. Arrange braid uniformly around crimp stem. Slide crimp sleeve over braid and crimp securely using recommended crimp tool. Slide center contact assembly into connector body. Thread coupling nut onto body and tighten to 10 in.-lb. torque. Slide heat shrink forward and shrink (as applicable).

Cinch Connectivity Solutions
299 Johnson Avenue SW, Waseca, MN 56093 USA • 800.247.8256 • +1 507 833 8822 • cinchconnectivity.com

SMA - 50 Ohm Connectors

Specifications

INCHES (MILLIMETERS)
CUSTOMER DRAWINGS AVAILABLE UPON REQUEST

ELECTRICAL RATINGS

Impedance: 50 ohms

Frequency Range:

Dummy loads	0-2 GHz
Flexible cable connectors	0-12.4 GHz
Uncabled receptacles, RA semi-rigid and adapters	0-18.0 GHz
Straight semi-rigid cable connectors and field replaceable connectors	0-26.5 GHz

VSWR: (f = GHz)

	Straight Cabled Connectors	Right Angle Cabled Connectors
RG-178 cable	1.20 + .025f	1.20 + .03f
RG-316, LMR-100 cable	1.15 + .02f	1.15 + .03f
RG-58, LMR-195 cable	1.15 + .01f	1.15 + .02f
RG-142 cable	1.15 + .01f	1.15 + .02f
LMR-200, LMR-240 cable	1.10 + .03f	1.10 + .06f
.086 semi-rigid	1.07 + .008f	1.18 + .015f
.141 semi-rigid (w/contact)	1.05 + .008f	1.15 + .015f
.141 semi-rigid (w/o contact)	1.035 + .005f	
Jack-bulkhead jack adapter and plug-plug adapter	1.05 + .01f	
Jack-jack adapter and plug-jack adapter	1.05 + .005f	
Uncabled receptacles, dummy loads	N/A	
Field replaceable (*see page 59*)	N/A	

Working Voltage: (Vrms maximum)

Connectors for Cable Type	Sea Level	70K Feet
RG-178	170	45
RG-316; LMR-100, 195, 200	250	65
RG-58, RG-142, LMR-240, .086 semi-rigid, uncabled receptacles, .141 semi-rigid w/o contact	335	85
.141 semi-rigid with contact and adapters	500	125
Dummy loads	N/A	

Dielectric Withstanding Voltage: (VRMS minimum at sea level)

Connectors for RG-178	500
Connectors for RG-316; LMR-100, 195, 200	750
Connectors for RG-58, RG-142, LMR-240, .086 semi-rigid, field replaceable, uncabled receptacles	1000
Connectors for .141 semi-rigid with contact and adapters	1500
Connectors for .141 semi-rigid w/o contact, dummy loads	N/A

Corona Level: (Volts minimum at 70,000 feet)

Connectors for RG-178	125
Connectors for RG-316; LMR-100, 195, 200	190
Connectors for RG-58, RG-142, LMR-240, 086 semi-rigid, uncabled receptacles, .141 semi-rigid w/o contact	250
Connectors for .141 semi-rigid with contact and adapters	375
Dummy loads	N/A

Insertion Loss: (dB maximum)

Straight flexible cable connectors and adapters	0.06 $\sqrt{f}$ (GHz), tested at 6 GHz
Right angle flexible cable connectors	0.15 $\sqrt{f}$ (GHz), tested at 6 GHz
Straight semi-rigid cable connectors with contact	0.03 $\sqrt{f}$ (GHz), tested at 10 GHz
Right angle semi-rigid cable connectors	0.05 $\sqrt{f}$ (GHz), tested at 10 GHz
Straight semi-rigid cable connectors w/o contact	0.03 $\sqrt{f}$ (GHz), tested at 16 GHz
Straight low loss flexible cable connectors	0.06 $\sqrt{f}$ (GHz), tested at 1 GHz
Right Angle low loss flexible cable connectors	0.15 $\sqrt{f}$ (GHz), tested at 1 GHz
Uncabled receptacles, field replaceable, dummy loads	N/A

Insulation Resistance: 5000 megohms minimum

Contact Resistance: (milliohms maximum)

	Initial	After Environmental
Center contact (straight cabled connectors and uncabled receptacles)	3.0*	4.0*
Center contact (right angle cabled connectors and adapters)	4.0	6.0
Field replaceable connectors	6.0	8.0
Outer contact (all connectors)	2.0	N/A
Braid to body (gold plated connectors)	0.5	N/A
Braid to body (nickel plated connectors)	5.0	N/A

*N/A where the cable center conductor is used as a contact

RF Leakage: (dB minimum, tested at 2.5 GHz)

Flexible cable connectors, adapters and .141 semi-rigid connectors w/o contact	-60 dB
Field replaceable w/o EMI gasket	-70 dB
.086 semi-rigid connectors and .141 semi-rigid connectors with contact, and field replaceable with EMI Gasket	-90 dB
Two-way adapters	-90 dB
Uncabled receptacles, dummy loads	N/A

RF High Potential Withstanding Voltage: (Vrms minimum, tested at 4 and 7 MHz)

Connectors for RG-178	335
Connectors for RG-316; LMR-100, 195, 200	500
Connectors for RG-58, RG-142, LMR-240, .086 semi-rigid, .141 semi-rigid cable w/o contact, uncabled receptacles	670
Connectors for .141 semi-rigid with contact and adapters	1000

Power Rating (Dummy Load): 0.5 watt @ + 25°C, derated to 0.25 watt @ +125°C

MECHANICAL RATINGS

Engagement Design: MIL-C-39012, Series SMA
Engagement/Disengagement Force: 2 inch-pounds maximum
Mating Torque: 7 to 10 inch-pounds
Bulkhead Mounting Nut Torque: 15 inch-pounds
Coupling Proof Torque: 15 inch-pounds minimum
Coupling Nut Retention: 60 pounds minimum
Contact Retention:
6 lbs. minimum axial force (captivated contacts)
4 inch-ounce minimum torque (uncabled receptacles)

Cable Retention:

	Axial Force*(lbs)	Torque (in-oz)
Connectors for RG-178	10	N/A
Connectors for RG-316, LMR-100	20	N/A
Connectors for LMR-195, 200	30	N/A
Connectors for RG-58, LMR-240	40	N/A
Connectors for RG-142	45	N/A
Connectors for .086 semi-rigid	30	16
Connectors for .141 semi-rigid	60	55

*Or cable breaking strength whichever is less.

Durability: 500 cycles minimum
100 cycles minimum for .141 semi-rigid connectors w/o contact

ENVIRONMENTAL RATINGS (Meets or exceed the applicable paragraph of MIL-C-39012)

Temperature Range: - 65°C to + 165°C
Thermal Shock: MIL-STD-202, Method 107, Condition B
Corrosion: MIL-STD-202, Method 101, Condition B
Shock: MIL-STD-202, Method 213, Condition I
Vibration: MIL-STD-202, Method 204, Condition D
Moisture Resistance: MIL-STD-202, Method 106

†Avoid user injury due to misapplication. See safety advisory definitions inside front cover.

Cinch Connectivity Solutions
299 Johnson Avenue SW, Waseca, MN 56093 USA • 800.247.8256 • +1 507 833 8822 • cinchconnectivity.com

SMA - 50 Ohm Connectors

Specifications

INCHES (MILLIMETERS)
CUSTOMER DRAWINGS AVAILABLE UPON REQUEST

MATERIAL SPECIFICATIONS

Bodies: Brass per QQ-B-626, gold plated* per MIL-G-45204 .00001" min. or nickel plated per QQ-N-290
Contacts: Male - brass per QQ-B-626, gold plated per MIL-G-45204 .00003" min.
Female - beryllium copper per QQ-C-530, gold plated per MIL-G-45204 .00003" min.
Nut Retention Spring: Beryllium copper per QQ-C-533. Unplated
Insulators: PTFE fluorocarbon per ASTM D 1710 and ASTM D 1457 or Tefzel per ASTM D 3159 or PFA 340 per ASTM
Expansion Caps: Brass per QQ-B-613, gold plated per MIL-G-45204 .00001" min. or nickel plated per QQ-N-290
Crimp Sleeves: Copper per WW-T-799 or brass per QQ-B-613, gold plated per MIL-G-45204 .00001" min. or nickel plated per QQ-N-290
Mounting Hardware: Brass per QQ-B-626 or QQ-B-613, gold plated per MIL-G-45204 .00001" min. or nickel plated per QQ-N-290
Seal Rings: Silicone rubber per ZZ-R-765
EMI Gaskets: Conductive silicone rubber per MIL-G-83528, Type M

* All gold plated parts include a .00005" min. nickel underplate barrier layer.

Mating Engagement for SMA Series per MIL-C-39012

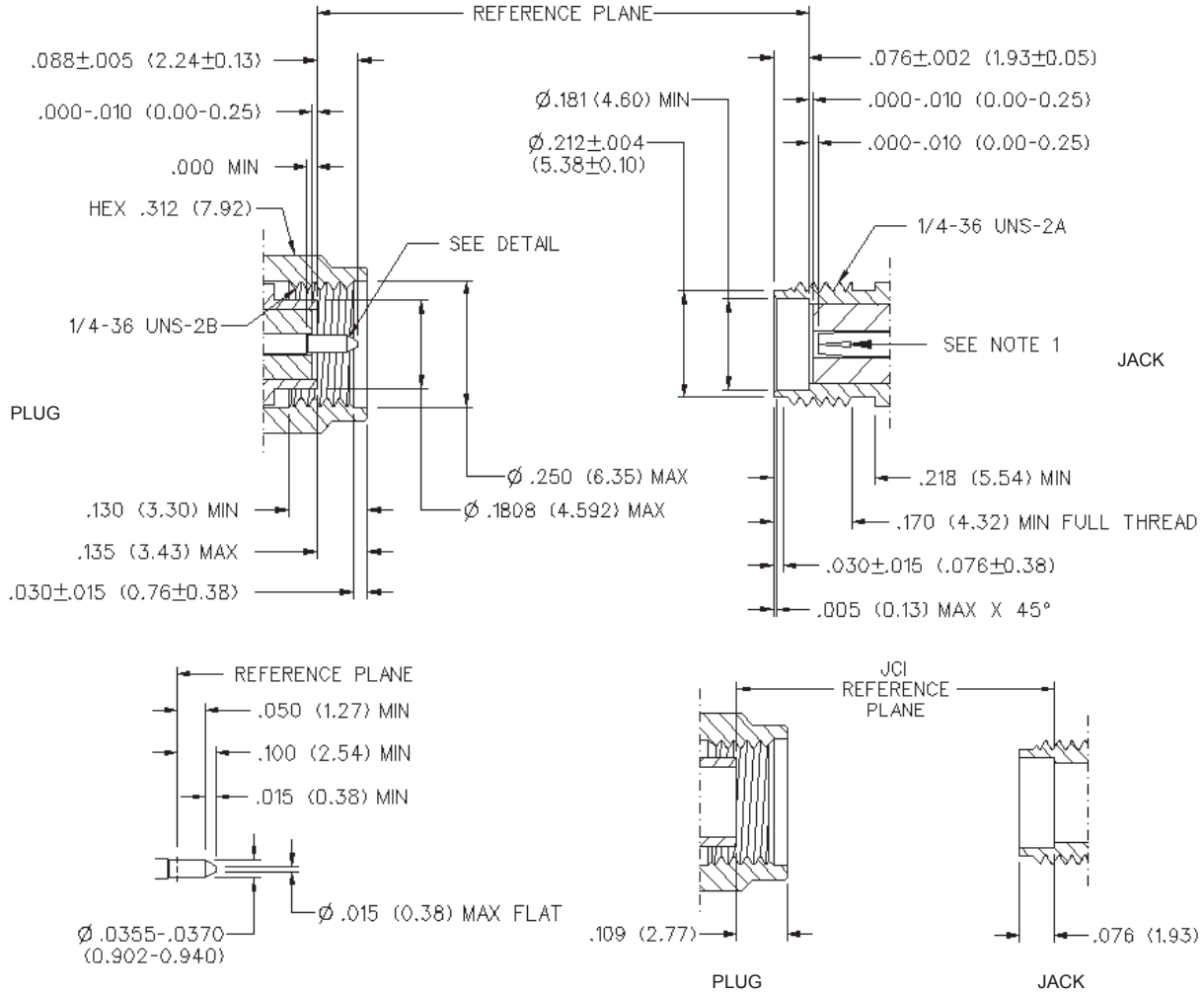

NOTES
1. ID OF CONTACT TO MEET VSWR, CONTACT RESISTANCE AND INSERTION WITHDRAWAL FORCES WHEN MATED WITH DIA .0355-.0370 MALE PIN.

Cinch Connectivity Solutions
299 Johnson Avenue SW, Waseca, MN 56093 USA • 800.247.8256 • +1 507 833 8822 • cinchconnectivity.com