THIS DRAWING IS UNPUBLISHED. RELEASED FOR PUBLICATION -.- .
© COPYRIGHT - BY TYCO ELECTRONICS CORPORATION. ALL RIGHTS RESERVED.

LOC	DIST
CM	0

REVISIONS

P	LTR	DESCRIPTION	DATE	DWN	APVD
	F1	REVISED PER ECR-18-005392	28NOV2018	BDA	SG

1. PINS TO COMPLY WITH AMP SOLDERABILITY SPEC. 108-11-3.
2. 0.00381 MIN MATTE TIN LEAD OVER 0.00127 MIN NICKEL.
3. 0.00076 MIN GOLD PLATE IN THE LOCALIZED PLATE AREA, 0.00381 MATTE TIN LEAD IN THE LOCALIZED PLATE AREA, BOTH OVER 0.00127 MIN NICKEL.
4. 0.00381 MIN MATTE TIN OVER 0.00127 MIN NICKEL.
5. 0.00076 MIN GOLD PLATE IN THE LOCALIZED PLATE AREA, 0.00381 MATTE TIN IN THE LOCALIZED PLATE AREA, BOTH OVER 0.00127 MIN NICKEL.

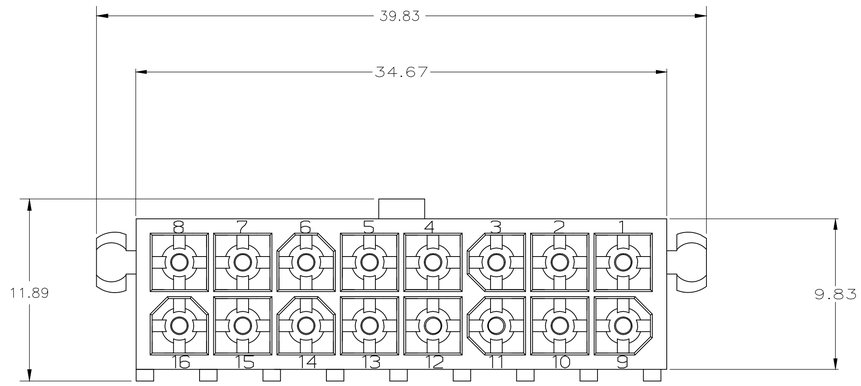

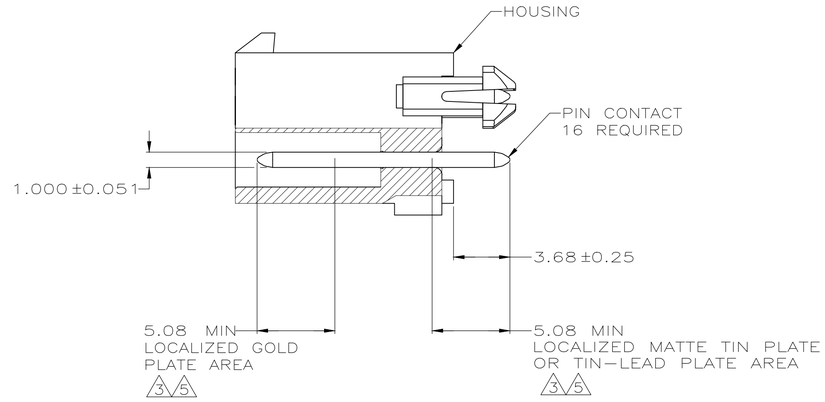

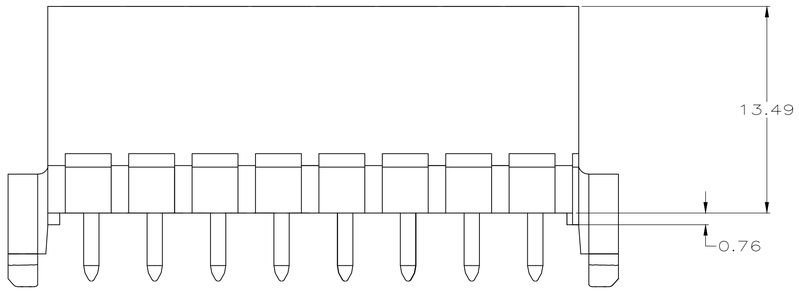

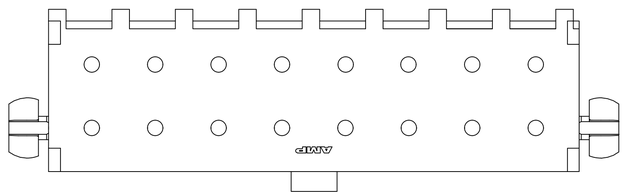

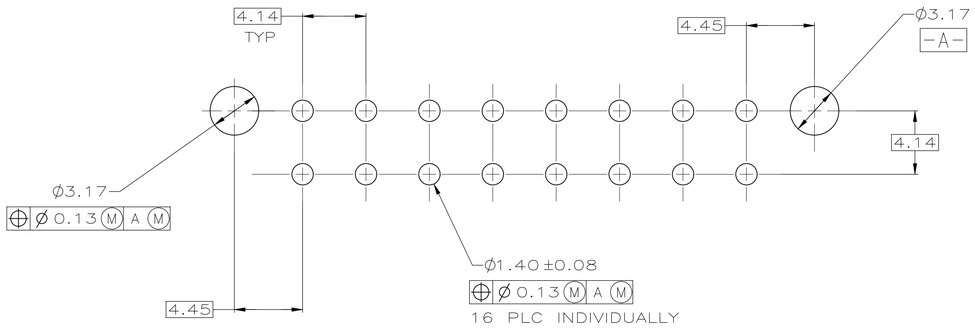

RECOMMENDED MOUNTING HOLE PATTERN
FOR 1.57 THICK P.C. BOARD

	MATERIAL (PIN)	FINISH	MATERIAL (HOUSING)	COLOR	PART NO.
	BRASS, GOLD	5	NYLON, UL94V-0	WHITE	1-794075-1
	BRASS, TIN	4	NYLON, UL94V-0	WHITE	1-794075-0
OBSOLETE	BRASS, GOLD	3	NYLON, UL94V-0	WHITE	~~794075-2~~
	BRASS, TIN-LEAD	2	NYLON, UL94V-0	WHITE	794075-1

THIS DRAWING IS A CONTROLLED DOCUMENT.

DIMENSIONS: mm

TOLERANCES, UNLESS OTHERWISE SPECIFIED:
0 PLC ± -
1 PLC ± -
2 PLC ± 0.13
3 PLC ± -
4 PLC ± -
ANGLES ± -

MATERIAL -
FINISH -

DWN S CARPENTER 09JUN05
CHK R JONES 29JUL2003
APVD R JONES 29JUL2003
PRODUCT SPEC -
APPLICATION SPEC -
WEIGHT -

TE Connectivity

NAME
HEADER ASSEMBLY, CLOSED BOTTOM, 16 CKT, DOUBLE ROW VERTICAL, MINI UNIVERSAL MATE-N-LOK

SIZE	CAGE CODE	DRAWING NO	RESTRICTED TO
A1	00779	C-794075	-

CUSTOMER DRAWING

SCALE	SHEET	OF	REV
5:1	1	1	F1

AMP 4805 REV 31MAR2000