OBSOLETE – PART DISCONTINUED

General Description

The AP1601 is a high efficiency step-up DC/DC converter for applications using 1 to 4 NiMH battery cells. Only three external components are required to deliver a fixed output voltage of 3.3V or 5V. The AP1601 starts up from less than 0.9V input with 1mA load. Pulse Frequency Modulation scheme brings optimized performance for applications with light output loading and low input voltages. The output ripple and noise are lower compared with the circuits operating in PSM mode.

The PFM control circuit operating in 100KHz (max.) switching rate results in smaller passive components. The space saving MSOP packages make the AP1601 an ideal choice of DC/DC converter for space conscious applications, like pagers, electronic cameras, and wireless microphones.

Features

- A Guaranteed Start-Up from less than 0.9V.
- High Efficiency.
- Low Quiescent Current.
- Less Number of External Components needed.
- Low Ripple and Low Noise.
- Space Saving Packages: MSOP-8L and MSOP-10L.
- MSOP-8L and MSOP-10L: Available in "Green" Molding Compound (No Br, Sb)
- Lead Free Finish / RoHS Compliant (Note 1)
- **For automotive applications requiring specific change control (i.e. parts qualified to AEC-Q100/101/200, PPAP capable, and manufactured in IATF 16949 certified facilities), please contact us or your local Diodes representative. https://www.diodes.com/quality/product-definitions/**

Applications

- Pagers
- Cameras
- Wireless Microphones
- Pocket Organizers
- Battery Backup Suppliers
- Portable Instruments

OBSOLETE

Ordering Information

AP1601 XXX G - 13

Package	Green	Packing
M8 : MSOP-8L M10 : MSOP-10L	G : Green	13 : Tape & Reel

Device	Package Code	Packaging (Note 2)	13" Tape and Reel	
			Quantity	Part Number Suffix
AP1601M8G-13	M8	MSOP-8L	2500/Tape & Reel	-13
AP1601M10G-13	M10	MSOP-10L	2500/Tape & Reel	-13

Notes:
1. EU Directive 2002/95/EC (RoHS). All applicable RoHS exemptions applied. Please visit our website at http://www.diodes.com/products/lead_free.html.
2. Pad layout as shown in Diodes Incorporated's package outline PDFs, which can be found on our website at http://www.diodes.com/package-outlines.html.

© Diodes Incorporated

OBSOLETE – PART DISCONTINUED

Pin Assignment

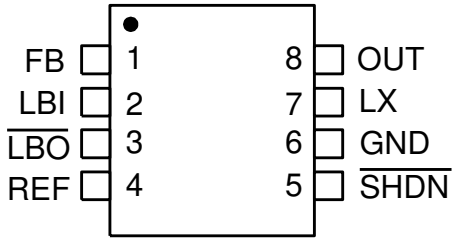

MSOP-8L

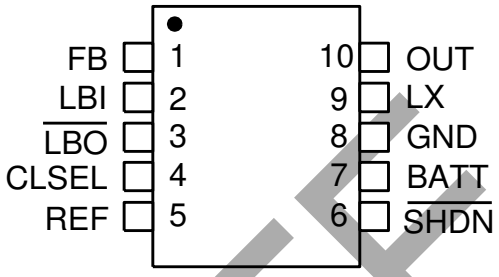

MSOP-10L

Pin Descriptions

Pin Name	Description
FB	Use a resistor network to set the output voltage from +2.0V to +5.5V. If FB=V_{OUT}, V_{OUT} t=3.3V fix voltage FB=GND, V_{OUT} =5V fix voltage
LBI	Low-Battery Comparator Input. Internally set to trip at +1.30V.
$\overline{LBO}$	Open-Drain Low-Battery Comparator Output. Connect $\overline{LBO}$ to OUT through a 100kΩ resistor. Output is low when V_{LBI} is <1.2V. $\overline{LBO}$ is high impedance during shutdown.
REF	1.2V Reference Voltage. Bypass with a 0.1µF capacitor.
OUT	Power Output. OUT provides bootstrap power to the IC.
LX	N-Channel and P-Channel Power MOSFET Drain
GND	Ground
$\overline{SHDN}$	Shutdown Input. Drive high (>80% of V_{OUT}) for operating mode. Drive low (<20% of V_{OUT}) for shutdown mode. Connect to OUT for normal operation.
CLSEL	Current-Limit Select Input. CLSEL = OUT sets the current limit to 0.8A. CLSEL = GND sets the current limit to 0.4A.
BATT	Battery Input and Damping Switch Connection. If damping switch is unused, leave BATT unconnected.

OBSOLETE

© Diodes Incorporated

OBSOLETE – PART DISCONTINUED

Functional Block Diagram

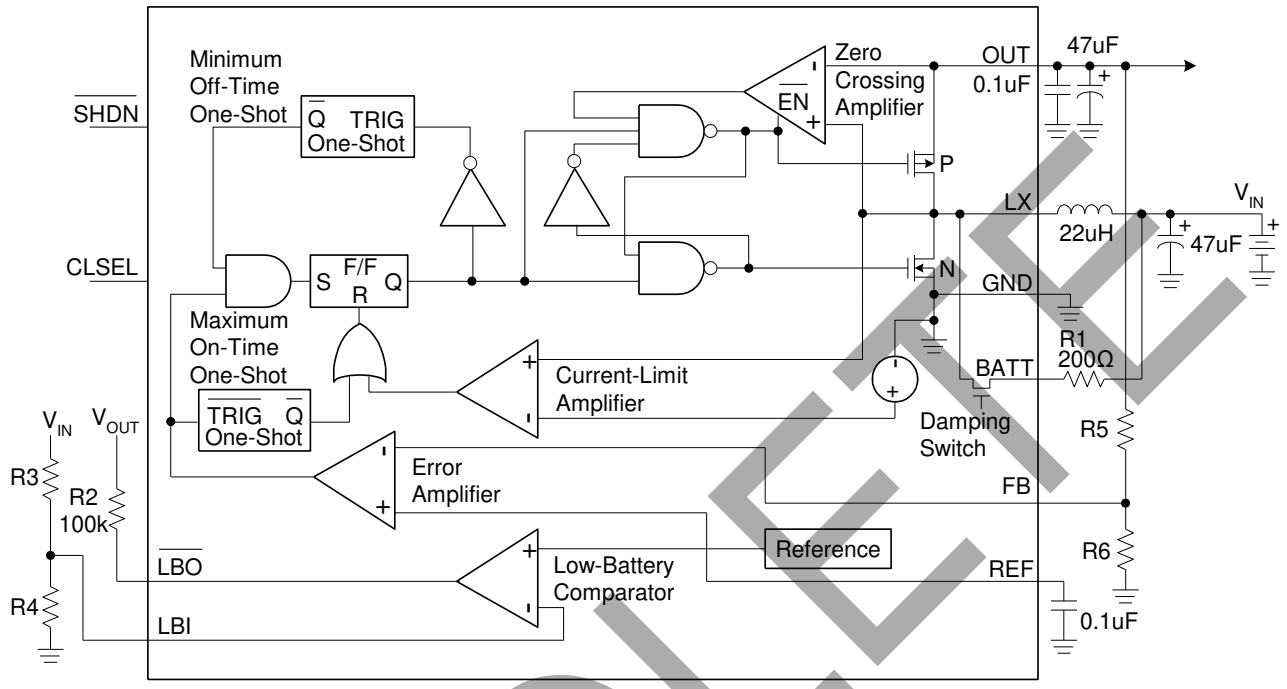

Typical Application Circuit

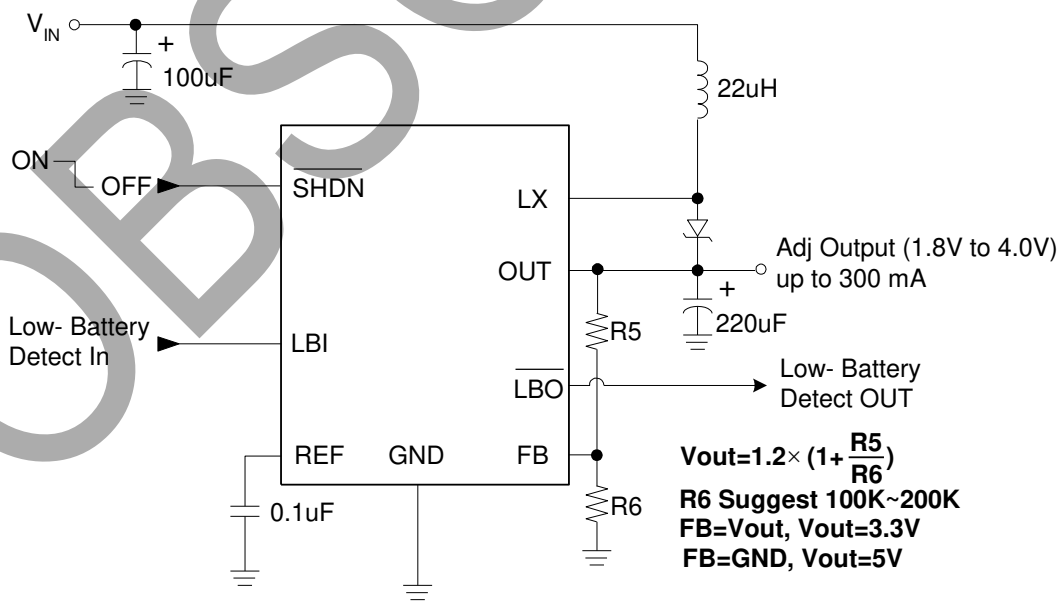

OBSOLETE

© Diodes Incorporated

OBSOLETE – PART DISCONTINUED

Absolute Maximum Ratings

Symbol	Parameter	Rating	Unit
ESD HBM	Human Body Model ESD Protection	2	KV
ESD MM	Machine Model ESD Protection	200	V
V_{CC}	Supply Voltage (OUT to GND)	-0.3 to 8.0	V
V_{BATT}	Battery Voltage (Batt to GND)	-0.3 to 6.0	V
-	LBI, REF, FB, CLSEL to GND	-0.3 to V_{OUT}+0.3	V
V_{SW}	Switch Voltage (LX to GND)	-0.3 to V_{OUT}+0.3	V
I_{OUT}	Output Current (OUT)	-1.5 to +1.5	A
V_{LBO}	LBO to GND	6.0	V
I_{SW}	Switch Current (LX)	-1.5 to +1.5	A
T_J	Operation Junction Temperature Range	-40 to +125	°C
T_{ST}	Storage Temperature Range	-65 to +150	°C

Recommended Operating Conditions

Symbol	Parameter	Min	Max	Unit
V_{IN}	Input Voltage	1.1	5.5	V
I_{OUT}	Output Current	-	1.2	A
T_A	Operating Ambient Temperature	-40	+85	ºC

OBSOLETE

© Diodes Incorporated

OBSOLETE – PART DISCONTINUED

Electrical Characteristics

(V_{BATT} = 2V, FB = OUT (V_{OUT} = 3.3V), R_L = ∞, T_A = 0°C to +85°C, unless otherwise noted. Typical values are at T_A = +25°C.)

Symbol	Parameter	Conditions		Min	Typ.	Max	Unit
-	Minimum Input Voltage	-		-	0.9	-	V
V_{IN}	Operating Voltage	T_A = +25°C		1.1	-	5.5	V
-	Start-Up Voltage	T_A = +25°C, RL = 3kΩ (Note 3)		-	0.9	1.1	V
-	Start-Up Voltage Temperature	-		-	-2	-	mV/°C
-	Output Voltage Range	-		2	-	5.5	V
I_{OUT}	Steady-State Output Current (Note 4)	(V_{OUT} = 3.3V)	AP1601 (CLSEL=OUT)	300	420	-	mA
			AP1601 (CLSEL=GND)	150	220	-	
		(V_{OUT} = 5V)	AP1601 (CLSEL=OUT)	180	285	-	
			AP1601 (CLSEL=GND)	90	130	-	
V_{REF}	Reference Voltage	I_{REF}=0		1.176	1.2	1.224	V
TEMPCO	Reference Voltage Temperature	-		-	0.024	-	mV/°C
V_{REF_LOAD}	Reference Voltage Load Regulation	I_{REF}=0 to 20μA		-	30	80	mV
V_{REF_LINE}	Reference Voltage Line Regulation	V_{OUT}=2V to 5.5V		-	0.08	2.5	mV/V
-	FB, LB1 Input Threshold	-		1.176	1.2	1.224	V
$R_{DS(ON)}$	Internal NFET, PFET On-Resistance	I_{LX}=100mA		-	0.3	0.6	Ω
I_{LIM}	LX Switch Current Limit (NFET)	AP1601 MSOP-8L		0.80	1	1.20	A
		AP1601 MSOP-10L (CLSEL=OUT)		0.80	1	1.20	
		AP1601 MSOP-10L (CLSEL=GND)		0.40	0.50	0.65	
I_{LEAK}	LX Leakage Current	I_{LX}=0, 5.5V; V_{OUT}=5.5V		-	0.05	1	μA
θ_{JA}	Thermal Resistance Junction-to-Ambient	MSOP-8L (Note 5)		-	118	-	°C/W
		MSOP-10L (Note 5)		-	88	-	
θ_{JC}	Thermal Resistance Junction-to-Case	MSOP-8L (Note 5)		-	30	-	°C/W
		MSOP-10L (Note 5)		-	16	-	

Notes:
3. Start-up voltage operation is guaranteed with the addition of a Schottky B0520LW external diode between the input and output.
4. Steady-state output current indicates that the device maintains output voltage regulation under load.
5. Test condition for MSOP-8L and MSOP-10L: Devices mounted on 2oz copper, with minimum recommended pad layout on top and bottom layer with thermal vias, double side FR-4 PCB.

OBSOLETE

© Diodes Incorporated

OBSOLETE – PART DISCONTINUED

Electrical Characteristics (continued)

(V_{BATT} = 2V, R_L =∞, T_A = 0°C to +85°C, unless otherwise noted. Typical values are at T_A = +25°C.)

Symbol	Parameter	Conditions	Min	Typ.	Max	Unit
-	Operating Current into OUT	V_{FB}=1.4V, V_{OUT}=3.3V	-	16	35	μA
-	Shutdown Current into OUT	$\overline{SHDN}$ =GND	-	0.1	1	μA
-	Efficiency	V_{OUT}=3.3V, I_{LOAD}=200mA	-	90	-	%
		V_{OUT}=2V, I_{LOAD}=1mA	-	85	-	
t_{ON}	LX Switch On-Time	V_{FB}=1V, V_{OUT}=3.3V	3	4	7	μs
t_{OFF}	LX Switch Off-Time	V_{FB}=1V, V_{OUT}=3.3V	0.8	1	1.2	μs
I_{FB}	FB Input Current	V_{FB}=1.4V	-	0.03	50	nA
I_{LBI}	LBI Input Current	L_{LBI}=1.4V	-	1	50	nA
I_{CLSEL}	CLSEL Input Current	AP1601, CLSEL=OUT	-	1.4	3	μA
$I_{\overline{SHDN}}$	$\overline{SHDN}$ Input Current	$V_{\overline{SHDN}}$ =0 or V_{OUT}	-	0.07	50	nA
-	$\overline{LBO}$ Low Output Voltage	L_{LBI}=0, I_{SINK}=1mA	-	0.2	0.4	V
$I_{\overline{LBO}}$	$\overline{LBO}$ Off Leakage Current	$V_{\overline{LBO}}$ =5.5V, L_{LBI}=5.5V	-	0.07	1	μA
	Damping Switch Resistance	AP1601, V_{BATT}=2V	-	88	150	Ω
V_{IL}	$\overline{SHDN}$ Input Voltage	-	-	-	0.2 V_{OUT}	V
V_{IH}		-	0.8 V_{OUT}	-	-	
V_{IL}	CLSEL Input Voltage	-	-	-	0.2 V_{OUT}	V
V_{IH}		-	0.8 V_{OUT}	-	-	

OBSOLETE

© Diodes Incorporated

OBSOLETE – PART DISCONTINUED

Functional Description

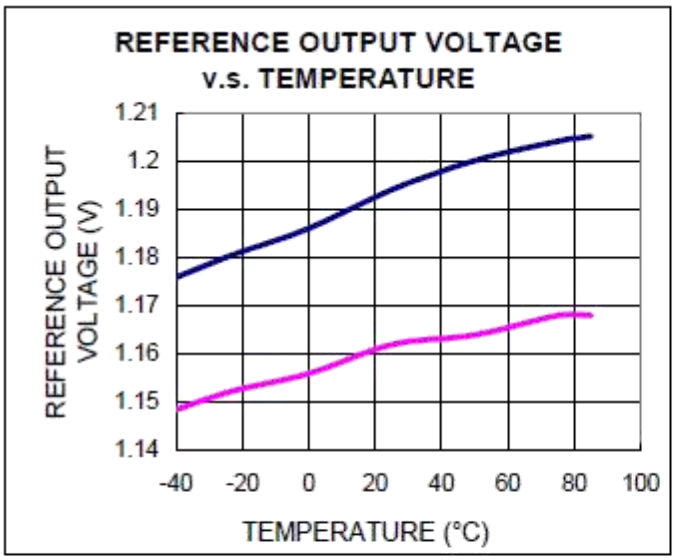

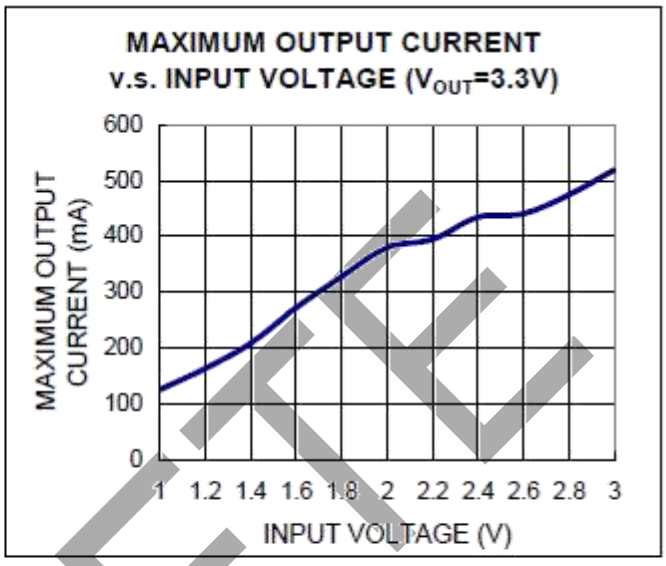

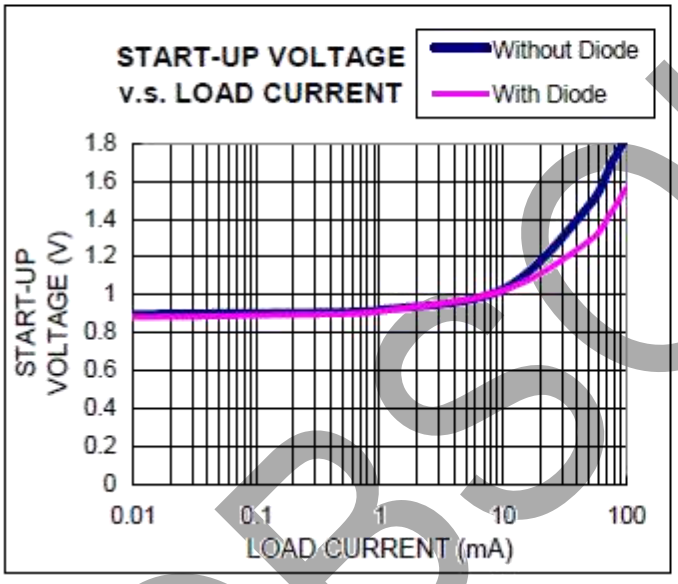

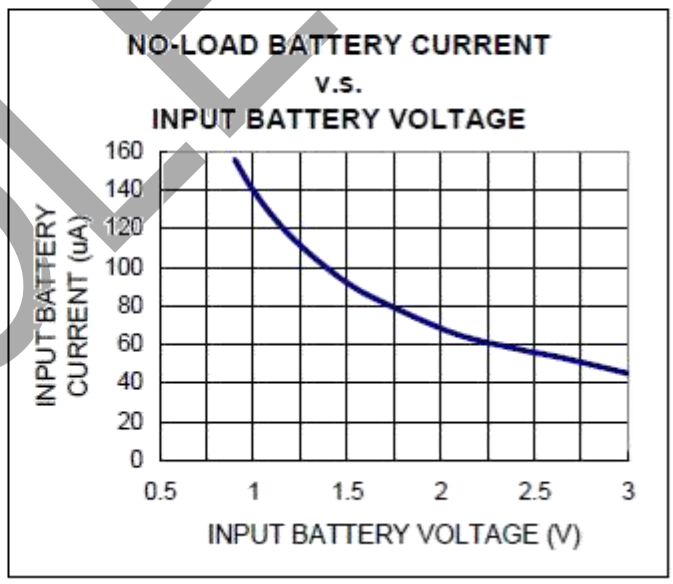

OBSOLETE

© Diodes Incorporated

OBSOLETE – PART DISCONTINUED

Functional Description (continued)

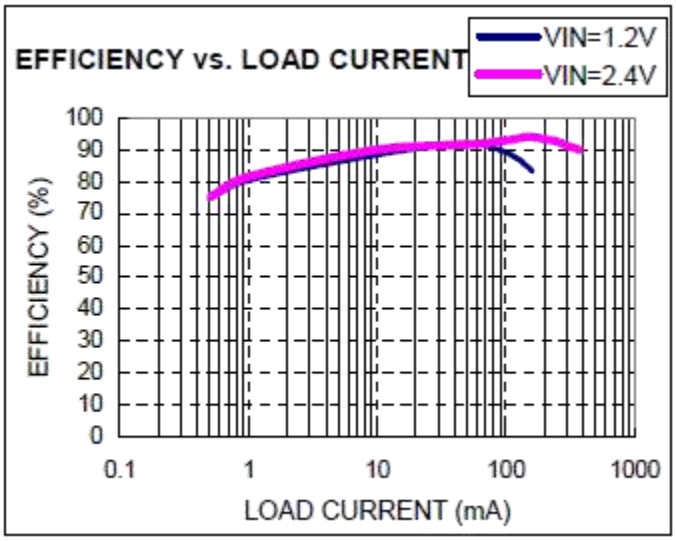

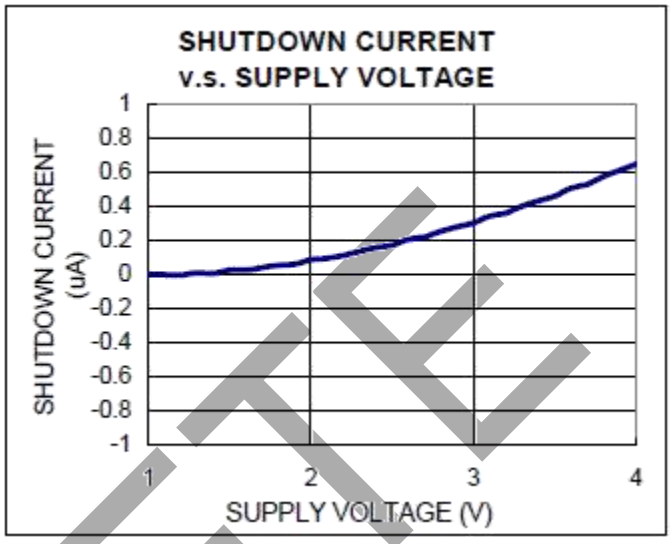

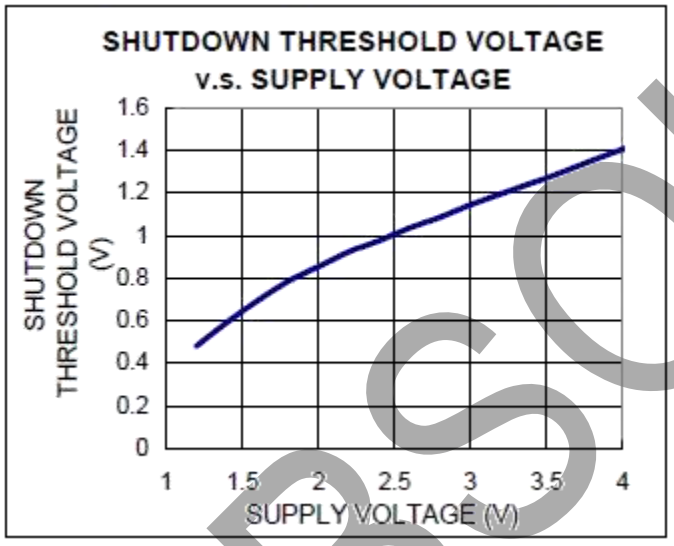

OBSOLETE

© Diodes Incorporated

OBSOLETE – PART DISCONTINUED

Functional Description

General Description

AP1601 PFM (pulse frequency modulation) converter IC series combine a switch mode converter, N-channel power MOSFET, precision voltage reference, and voltage detector in a single monolithic device. They offer both extreme low quiescent current, high efficiency, and very low gate threshold voltage to ensure start-up with low battery voltage (0.9V typ.). Designed to maximize battery life in portable products, and minimize switching losses by only switching as needed service the load. PFM converters transfer a discrete amount of energy per cycle and regulate the output voltage by modulating switching frequency with the constant turn-on time. Switching frequency depends on load, input voltage, and inductor value, and it can range up to 100KHz. The SW on resistance is typically 1 to 1.5W to minimize switch losses. When the output voltage drops, the error comparator enables 100KHz oscillator that turns on the MOSFET around 7.5us and 2.5ms off time. Turning on the MOSFET allows inductor current to ramp up, storing energy in a magnetic field and when MOSFET turns off that force inductor current through diode to the output capacitor and load. As the stored energy is depleted, the current ramp down until the diode turns off. At this point, inductor may ring due to residual energy and stray capacitance. The output capacitor stores charge when current flowing through the diode is high, and release it when current is low, thereby maintaining a steady voltage across the load. As the load increases, the output capacitor discharges faster and the error comparator initiates cycles sooner, increasing the switching frequency. The maximum duty cycle ensure adequate time for energy transfer to output during the second half each cycle. Depending on circuit, PFM converter can operate in either discontinuous mode or continuous conduction mode. Continuous conduction mode means that the inductor current does not ramp to zero during each cycle.

Diode Selection

Speed, forward drop, and leakage current are the three main considerations in selecting a rectifier diode. Best performance is obtained with Schottky rectifier diode, such as 1N5819. Motorola makes B0520LW in surface mount. For lower output power a 1N4148 can be used although efficiency and start up voltage will suffer substantially.

Inductor Selection

To operate as an efficient energy transfer element, the inductor must fulfill three requirements. First, the inductance must be low enough for the inductor to store adequate energy under the worst case condition of minimum input voltage and switch ON time. Second, the inductance must also be high enough so maximum current rating of AP1601 and inductor are not exceed at the other worst case condition of maximum input voltage and ON time. Lastly, the inductor must have sufficiently low DC resistance so excessive power is not lost as heat in the windings. But unfortunately this is inversely related to physical size. Minimum and Maximum input voltage, output voltage and output current must be established before and inductor can be selected.

Capacitor Selection

A poor choice for a output capacitor can result in poor efficiency and high output ripple. Ordinary aluminum electrolyzers, while inexpensive may have unacceptably poor ESR and ESL. There are low ESR aluminum capacitors for switch mode DC-DC converters which work much better than general propose unit. Tantalum capacitors provide still better performance at more expensive. OS-CON capacitors have extremely low ESR in a small size. If capacitance is reduced, output ripple will increase. Most of the input supply is supplied by the input bypass capacitor. The capacitor voltage rating should be at least 1.25 times greater than a maximum input voltage.

OBSOLETE

© Diodes Incorporated

OBSOLETE – PART DISCONTINUED

Marking Information

(1) MSOP-8L

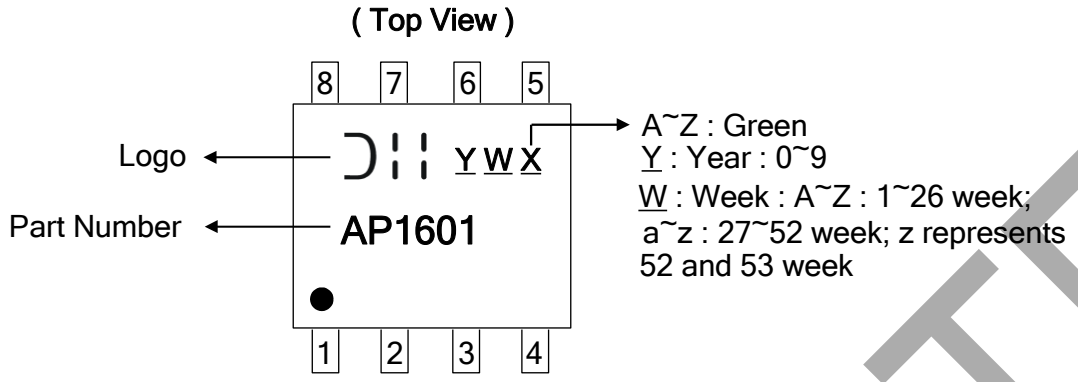

(2) MSOP-10L

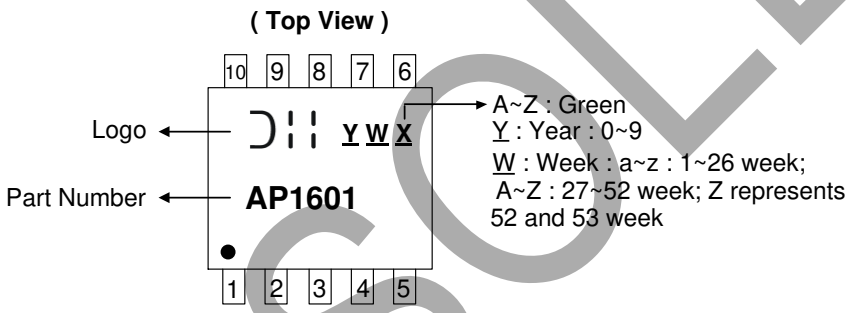

OBSOLETE

© Diodes Incorporated

OBSOLETE – PART DISCONTINUED

Package Information (All Dimensions in mm)

Please see http://www.diodes.com/package-outlines.html for the latest version.

(1) Package Type: MSOP-8L

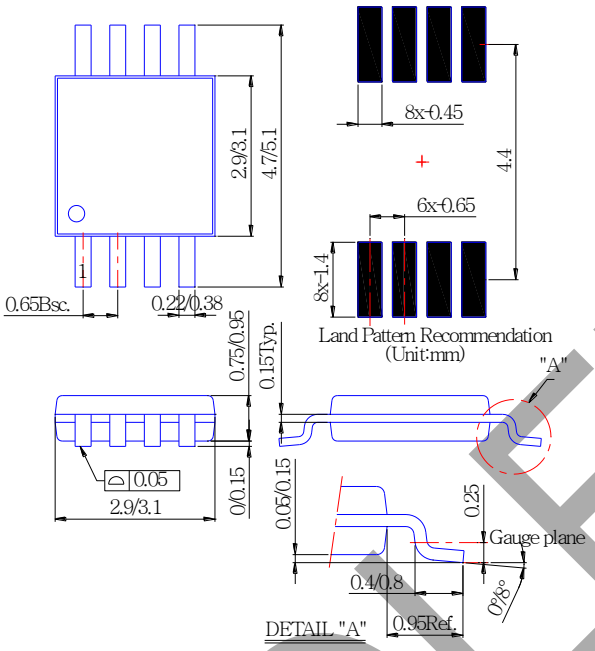

(2) Package Type: MSOP-10L

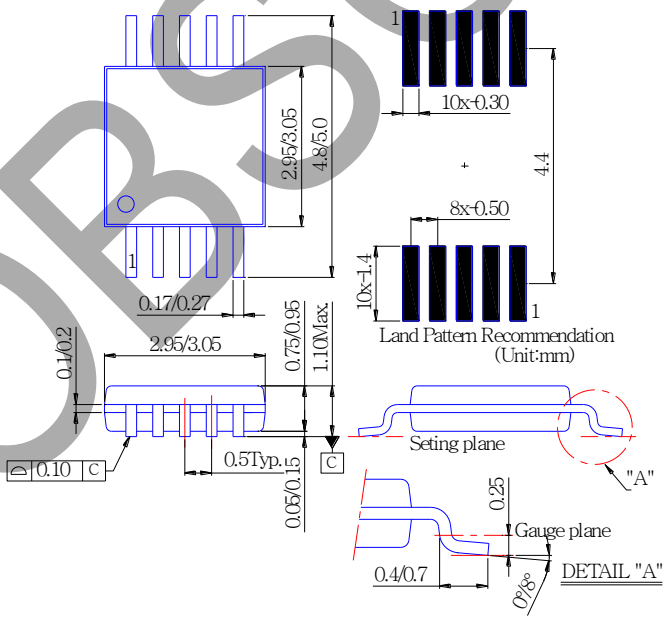

OBSOLETE

© Diodes Incorporated

OBSOLETE – PART DISCONTINUED

IMPORTANT NOTICE

DIODES INCORPORATED MAKES NO WARRANTY OF ANY KIND, EXPRESS OR IMPLIED, WITH REGARDS TO THIS DOCUMENT, INCLUDING, BUT NOT LIMITED TO, THE IMPLIED WARRANTIES OF MERCHANTABILITY AND FITNESS FOR A PARTICULAR PURPOSE (AND THEIR EQUIVALENTS UNDER THE LAWS OF ANY JURISDICTION).

Diodes Incorporated and its subsidiaries reserve the right to make modifications, enhancements, improvements, corrections or other changes without further notice to this document and any product described herein. Diodes Incorporated does not assume any liability arising out of the application or use of this document or any product described herein; neither does Diodes Incorporated convey any license under its patent or trademark rights, nor the rights of others. Any Customer or user of this document or products described herein in such applications shall assume all risks of such use and will agree to hold Diodes Incorporated and all the companies whose products are represented on Diodes Incorporated website, harmless against all damages.

Diodes Incorporated does not warrant or accept any liability whatsoever in respect of any products purchased through unauthorized sales channel. Should Customers purchase or use Diodes Incorporated products for any unintended or unauthorized application, Customers shall indemnify and hold Diodes Incorporated and its representatives harmless against all claims, damages, expenses, and attorney fees arising out of, directly or indirectly, any claim of personal injury or death associated with such unintended or unauthorized application.

Products described herein may be covered by one or more United States, international or foreign patents pending. Product names and markings noted herein may also be covered by one or more United States, international or foreign trademarks.

This document is written in English but may be translated into multiple languages for reference. Only the English version of this document is the final and determinative format released by Diodes Incorporated.

LIFE SUPPORT

Diodes Incorporated products are specifically not authorized for use as critical components in life support devices or systems without the express written approval of the Chief Executive Officer of Diodes Incorporated. As used herein:

A. Life support devices or systems are devices or systems which:

1. are intended to implant into the body, or
2. support or sustain life and whose failure to perform when properly used in accordance with instructions for use provided in the labeling can be reasonably expected to result in significant injury to the user.

B. A critical component is any component in a life support device or system whose failure to perform can be reasonably expected to cause the failure of the life support device or to affect its safety or effectiveness.

Customers represent that they have all necessary expertise in the safety and regulatory ramifications of their life support devices or systems, and acknowledge and agree that they are solely responsible for all legal, regulatory and safety-related requirements concerning their products and any use of Diodes Incorporated products in such safety-critical, life support devices or systems, notwithstanding any devices- or systems-related information or support that may be provided by Diodes Incorporated. Further, Customers must fully indemnify Diodes Incorporated and its representatives against any damages arising out of the use of Diodes Incorporated products in such safety-critical, life support devices or systems.

Copyright © 2020, Diodes Incorporated

www.diodes.com

OBSOLETE