MICRO SWITCH A DIVISION OF MINNEAPOLIS-HONEYWELL REGULATOR COMPANY FREEPORT, ILLINOIS FED. MFR. CODE 91929	ASSEMBLY- TOGGL SWITCH	CATALOG LISTING 115AT24

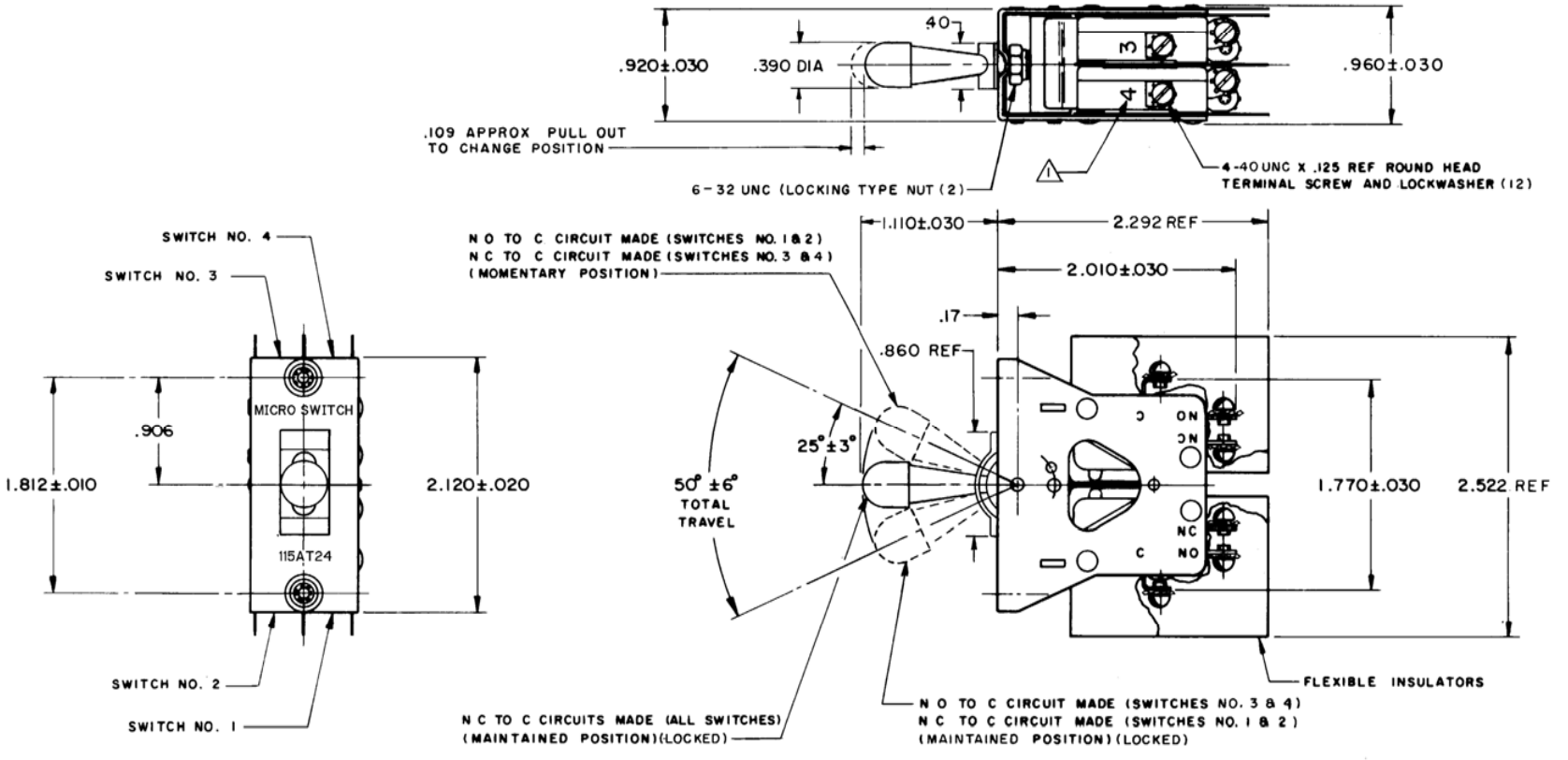

NOTES
1 - BASIC SWITCH NO. MARKED ON EACH BASIC SWITCH
2 - UNIT INCLUDES CAT. LIST. V3-1 (4) BASIC SWITCHES
3 - SWITCHES DO NOT NECESSARILY OPERATE SIMILTANEOUSLY

THIS DRAWING COVERS A PROPRIETARY ITEM AND IS THE PROPERTY OF MICRO SWITCH, A DIVISION OF MINNEAPOLIS-HONEYWELL REGULATOR CO. THIS DRAWING IS NOT TO BE COPIED OR USED WITHOUT THE APPROVAL OF MICRO SWITCH.

CHARACTERISTICS	ELECTRICAL DATA	SCALE FULL
	CONTACT ARRANGEMENT S P D T (4)	DO NOT SCALE PRINT
	15A-1/3 HP-125 OR 250 VAC 1/2 A-125 VDC; 1/4 A-250 VDC	UNLESS OTHERWISE SPECIFIED DIMENSIONS ARE IN INCHES TOLERANCES ARE: ONE PLACE (.0) ±.030 TWO PLACE (.00) ±.015 THREE PLACE (.000) ±.005 ANGLES ±
		WEIGHT

REPLACES | RELEASE NO. SR 11269 | PAGE 1 OF 1 | 6 | CHECK | ONS 1269 F P 63 0089 M 86 35113 98 | CHECK BRJ 25 SEPT 63 | CHECK DAW 25 SEPT 63 | CHECK | DRAWN MBF 25 SEP 63