MI DRG. NO. 6944-3A-6944-4A REV.

6944-3
6944-4

A

TUNING ELEMENT

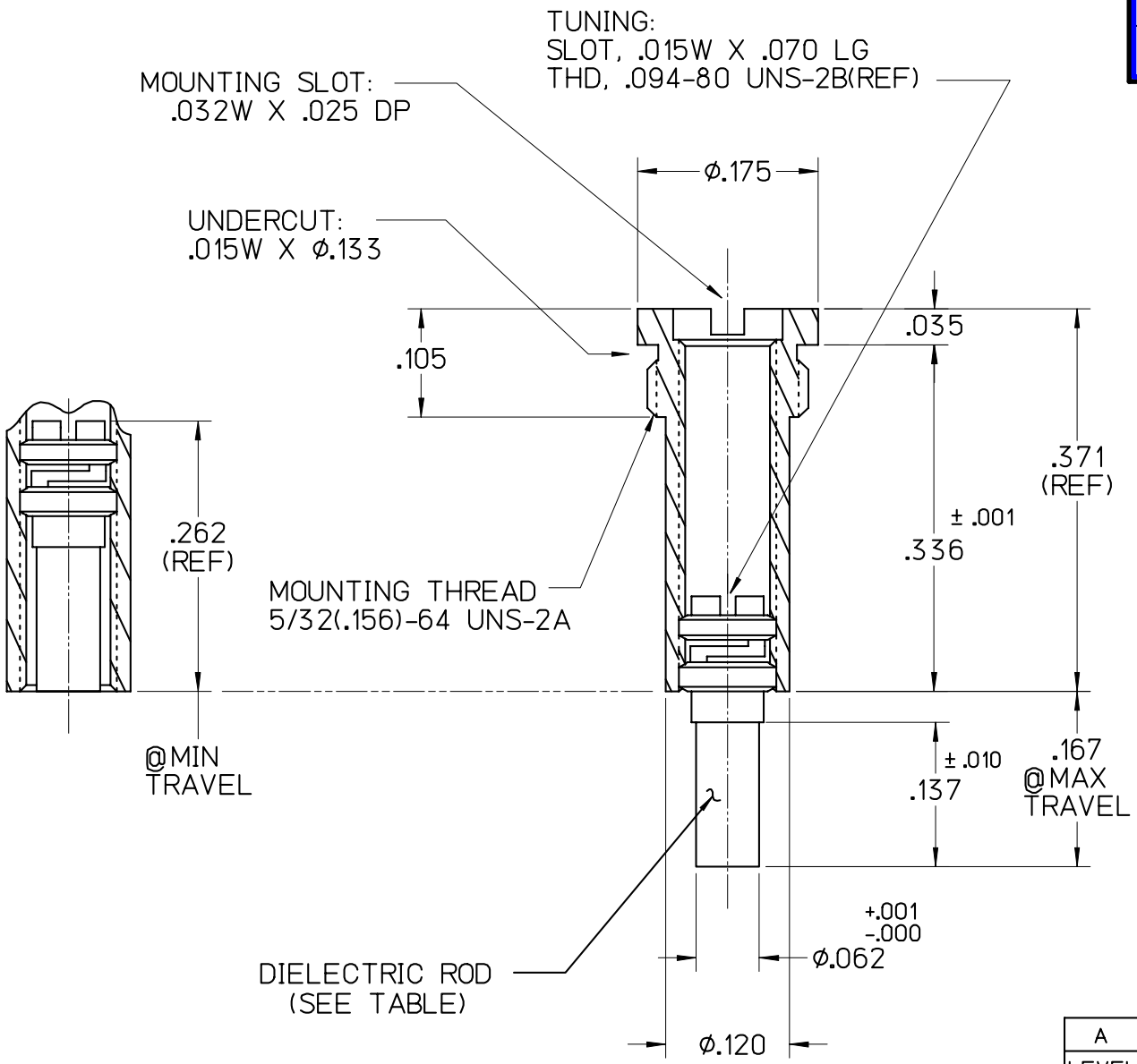

SPECIFICATIONS		FILE: AIROUT
LOW CONTACT RESISTANCE		< 0.01 OHMS
ROTATIONAL LIFE		> 1000 REVOLUTIONS
TORQUE	TUNING	0.3 TO 3.0 OZ. IN.
	NUT MOUNTING	NOT APPLICABLE
MOUNTING	CLEARANCE HOLE	ø .162/.160
	THREADED HOLE	JMC TAP P/N 7059 (.156-64 UNS-2)
BRASS / DIELECTRIC STRUCTURE		

APPLICATIONS:
FOR HIGH Q VARIABLE REACTANCE TUNING OF MICROWAVE CAVITIES, FILTERS, AND OTHER RESONANT STRUCTURES.

DASH NO.	DIELECTRIC ROD
6944-3	ALUMINA
6944-4	SAPPHIRE

LEVEL	DATE	DRN.	CHK.	APP.	ECN
A	11/7/00	RJV	-	-	000-352

REVISIONS

JOHANSON MANUFACTURING CORPORATION
ROCKAWAY VALLEY ROAD, BOONTON, N.J. 07005 (973)334-2676 FAX (973)334-2954
ELECTRONIC ACCURACY THROUGH MECHANICAL PRECISION

DRN.	CHK.	APP.	SCALE
RJV	RJV	WEH	6" = 1"
DATE 11/7/00	DATE 11/8/00	DATE 11/9/00	.XX ± .015 .XXX ± .005

PROPRIETARY INFORMATION CONTAINED NOT TO BE USED WITHOUT JOHANSON MANUFACTURING CORPORATION APPROVAL