Rev	AWO #	Description	Date	Appr
-		RELEASED	6/26/06	

APPROVED: _____

DATE: _____ TITLE: _____

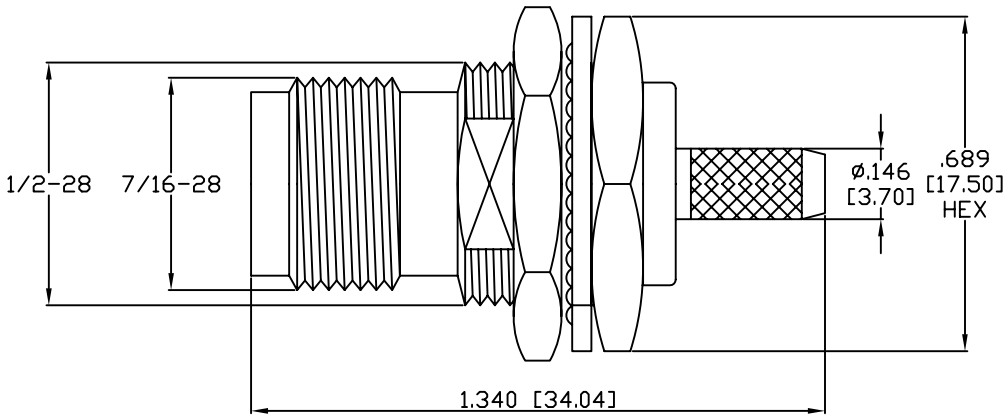

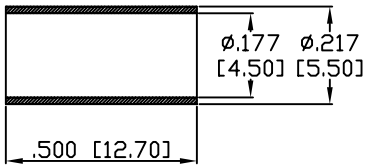

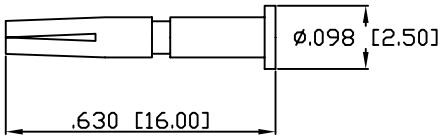

DESCRIPTION	MATERIAL	FINISH	QTY
RING	BRASS	NICKEL	1
PIN	BRASS	GOLD	1
WASHER	BRASS	NICKEL	1
INSULATOR	TEFLON	WHITE	1
GASKET	RUBBER	RED	1
WASHER	STEEL	NICKEL	1
NUT	BRASS	NICKEL	1
BODY	BRASS	NICKEL	1
BODY	BARSS	NICKEL	1

SPECIFICATIONS:

Electrical:
Nominal Impedance: 50 ohms
Frequency range: 0–4 GHz
Maximum peak voltage: 500V
Insulation resistance: 5000 Mohm min @ 500 VDC
Dielectric withstanding voltage: 1500 VAC rms
Environmental:
Lead free, RoHS compliant.

RoHS COMPLIANT

UNLESS OTHERWISE SPECIFIED
ALL DIMENSIONS ARE INCHES [MM]
TOLERANCES: EXCEPT AS NOTED

INCHES		HOLES	
.X	± .10	Ø.X	±.10
.XX	± .020	Ø.XX	±.015
.XXX	± .015	Ø.XXX	±.010

APPROVALS		DATE
DRAWN	SS	6/26/06
CHECKED		
APPROVED		

ADAM TECH
909 Rahway Avenue, Union, NJ 07083
Phone: 908-687-5000 Fax: 908-687-5710

TITLE: TNC FEMALE BULKHEAD, CRIMP

SIZE	PART NO.	REV.
X	RF7-11-T-02-50	-

REF: | SCALE: NTS | SHEET 1 OF 1