Alle Rechte vorbehalten/ *All rights reserved*

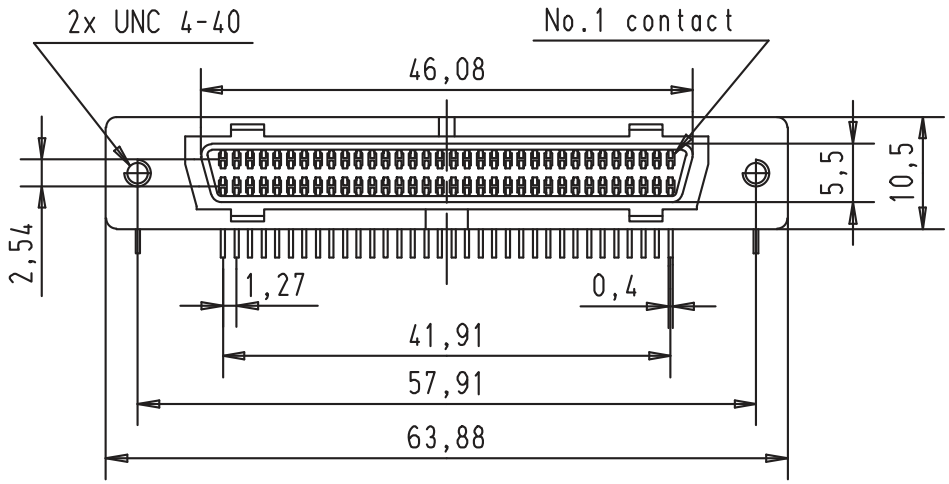

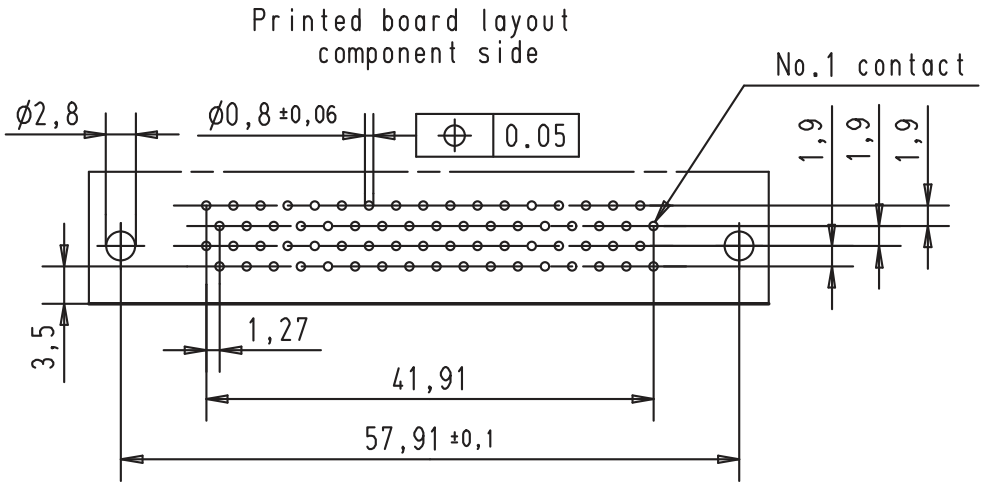

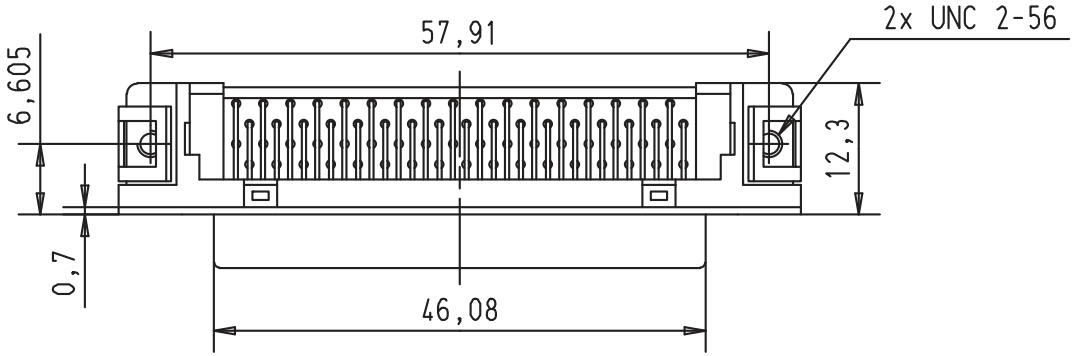

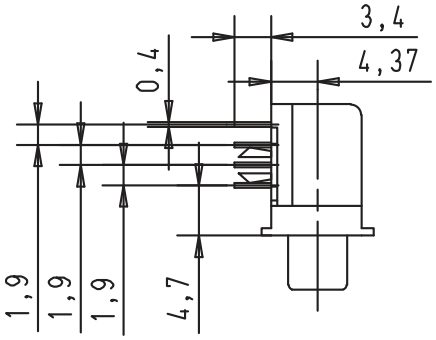

				Dat.	Name
			Detail.	21 JUN 01	S G
			Insp.		
			Stand.		
29686	21 JUN 01	S G			
Mod.	Dat.	Name			

All Dim. in mm
Orig. Size DIN A 4

HARTING EURL
F-95972 Paris

har.mik® I/O pin/socket
68 poles female connector
with angled solder pins and
without female screw lock

TB 60 02 068 5150

Sub.

Maßstab/ *Scale* 1,5:1

Blatt/ *Page* 1/1