FLIR T440bx 25° and 45° w/case

P/N: 62103-1704

Copyright

© 2016, FLIR Systems, Inc.

All rights reserved worldwide. Names and marks appearing herein are either registered trademarks or trademarks of FLIR Systems and/or its subsidiaries. All other trademarks, trade names or company names referenced herein are used for identification only and are the property of their respective owners.

Document identity

Publ. No.: 62103-1704
Release:
Commit: 35939
Language: en-US
Modified: 2016-05-30
Formatted: 2016-07-01

Website

http://www.flir.com

Customer support

http://support.flir.com

Disclaimer

Specifications subject to change without further notice. Camera models and accessories subject to regional market considerations. License procedures may apply. Products described herein may be subject to US Export Regulations. Please refer to exportquestions@flir.com with any questions.

General description
The FLIR T440bx is a camera that offers good performance at an affordable price. Excellent ergonomics, a walk-up-and-use interface, and easy communication make the FLIR T440bx a truly user-friendly camera for the beginner or advanced user.
Benefits:
• Excellent ergonomics: The FLIR T440bx has a tiltable infrared unit and auto-orientation, which make it easy to capture images from any angle comfortably. The small size and low weight of the camera facilitate its use over a full working day. • Affordable performance: The FLIR T440bx is equipped with the innovative Multi Spectral Dynamic Imaging (MSX) feature, which produces an image richer in detail than ever before. You can highlight objects of interest, on both the infrared and the visual image, by sketching or adding predefined stamps directly onto the camera's touch screen. • Extensive communication options: The Wi-Fi connectivity of the FLIR T440bx allows you to connect to smart phones or tablets, for the wireless transfer of images or the remote control of the camera. The Bluetooth-based METERLiNK function transfers readings from external measurement instruments to the infrared image. • Support for UltraMax: When enabling UltraMax in the camera, the resolution of images can be substantially enhanced when importing the images into FLIR Tools.

Imaging and optical data	
IR resolution	320 × 240 pixels
MSX resolution	320 × 240 pixels
UltraMax	Yes
Thermal sensitivity/NETD	<30 mK @ +30°C (+86°F)
Field of view (FOV)	25° × 19°
Minimum focus distance	0.4 m (1.31 ft.)
Focal length	18 mm (0.7 in.)
Spatial resolution (IFOV)	1.36 mrad
F-number	1.3
Image frequency	60 Hz
Focus	Automatic (one shot) or manual
Digital zoom	2×, 4× and 8×

FLIR T440bx 25° and 45° w/case

P/N: 62103-1704
© 2016, FLIR Systems, Inc.
#62103-1704; r. /35939; en-US

Detector data	
Detector type	Focal plane array (FPA), uncooled microbolometer
Spectral range	7.5–13 µm
Detector pitch	25 µm

Image presentation	
Display	Touch screen, 3.5 in. LCD, 320 × 240 pixels
Auto orientation	Automatic landscape or portrait
Image adjustment	Auto or manual

Image presentation modes	
Thermal MSX	Thermal image with enhanced detail presentation
Picture in Picture	Resizable and movable IR area on visual image

Measurement	
Object temperature range	• –20°C to +120°C (–4°F to +248°F) • 0°C to +650°C (+32°F to +1202°F)
Accuracy	±2°C (±3.6°F) or 2%, whichever is greater, at 25° C (77°F) nominal.

Measurement analysis	
Spotmeter	5
Area	5 + 5 areas (boxes or circles) with max./min./ average (in post-acquisition analysis)
Profile	1 line profile with max/min temp.
Automatic hot/cold detection	Auto hot or cold spotmeter markers within area and profile
Measurement presets	No measurements, Center spot, Hot spot, Cold spot, User preset 1, User preset 2
User presets (in live images)	The user can select and combine measurements from any number of available spots/boxes/circles/ profiles/delta
Difference temperature	Delta temperature between measurement functions or reference temperature
Reference temperature	Manually set using difference temperature
Emissivity correction	Variable from 0.01 to 1.0 or selected from materials list
Measurement corrections	Emissivity, reflected temperature, relative humidity, atmospheric temperature, object distance, external IR window compensation
Colors (palettes)	Iron, Rainbow, Rainbow HC, White hot, Black hot, Arctic, Lava

Alarm	
Color Alarm (isotherm)	Above/below/interval
Measurement function alarm	Audible/visual alarms (above/below) on any selected measurement function
Screening	Difference temperature alarm, audible

P/N: 62103-1704
© 2016, FLIR Systems, Inc.
#62103-1704; r. /35939; en-US

Alarm	
Humidity alarm	1 humidity alarm, including dew point alarm
Insulation alarm	1 insulation alarm

Set-up	
Set-up commands	Define user presets, Save options, Programmable button, Reset options, Set up camera, Wi-Fi, Compass, Bluetooth, Language, Time & units, Camera information

Service functions	
Camera software update	Use PC software FLIR Tools

Storage of images	
Image storage	Standard JPEG, including digital photo and measurement data, on memory card
Image storage mode	• Simultaneous storage of thermal and digital photo in same JPEG file. • Optional to store digital photo as a separate JPEG file.
Time lapse	15 seconds to 24 hours

Image annotations (in still images)	
Voice	60 seconds (via Bluetooth) stored with the image
Text	Add table. Select between predefined templates or create your own in FLIR Tools
Image description	Add short note (stored in JPEG EXIF tag)
Sketch	Draw on thermal/digital photo or add predefined stamps
METERLiNK	Wireless connection (Bluetooth) to: FLIR meters with METERLiNK
Report generation	• Instant Report (*.pdf file) in camera including IR and visual images • Separate PC software with extensive report generation

Geographic Information System	
Compass	Camera direction automatically added to every still image

Video recording in camera	
Non-radiometric IR video recording	MPEG-4 to memory card
Visual video recording	MPEG-4 to memory card

Video streaming	
Radiometric IR video streaming	Full dynamic to PC using USB or to mobile devices using Wi-Fi.
Non-radiometric IR video streaming	• MPEG-4 using Wi-Fi • Uncompressed colorized video using USB
Visual video streaming	• MPEG-4 using Wi-Fi • Uncompressed colorized video using USB

FLIR T440bx 25° and 45° w/case

P/N: 62103-1704
© 2016, FLIR Systems, Inc.
#62103-1704; r. /35939; en-US

Digital camera	
Built-in digital camera	3.1 Mpixels with LED light (photo as separate image)
Digital camera, focus	Fixed focus
Digital camera, FOV	Adapts to the IR lens
Built-in digital lens data	FOV 53° × 41°
Digital camera, aspect ratio	4:3

Laser pointer	
Laser	Activated by dedicated button
Laser alignment	Position is automatic displayed on the IR image
Laser classification	Class 2
Laser type	Semiconductor AlGaInP diode laser
Laser power	1 mW
Laser wavelength	635 nm (red)

Data communication interfaces	
Interfaces	USB-mini, USB-A, Bluetooth, Wi-Fi, composite video
METERLiNK/Bluetooth	Communication with headset and external sensors
Wi-Fi	Peer to peer (ad hoc) or infrastructure (network)
SD Card	One card slot for removable SD memory cards

USB	
USB	• USB-A: Connect external USB device • USB Mini-B: Data transfer to and from PC / uncompressed colorized video
USB, standard	USB Mini-B: 2.0

Composite video	
Video out	Composite
Video, standard	CVBS (ITU-R-BT.470 PAL/SMPTE 170M NTSC)
Video, connector type	4-pole 3.5 mm jack

Radio	
Wi-Fi	• Standard: 802.11 b/g • Frequency range: 2412–2462 MHz • Max. output power: 15 dBm
METERLiNK/Bluetooth	Frequency range: 2402–2480 MHz
Antenna	Internal

Power system	
Battery type	Rechargeable Li ion battery
Battery voltage	3.7 V
Battery capacity	4.4 Ah, at +20°C to +25°C (+68°F to +77°F)

FLIR T440bx 25° and 45° w/case

P/N: 62103-1704
© 2016, FLIR Systems, Inc.
#62103-1704; r. /35939; en-US

Power system	
Battery operating time	Approx. 4 hours at +25°C (+77°F) ambient temperature and typical use
Charging system	In camera (AC adapter or 12 V from a vehicle) or 2-bay charger
Charging time	4 h to 90% capacity, charging status indicated by LED's
Charging temperature	0°C to +45°C (+32°F to +113°F)
Power management	Automatic shutdown and sleep mode (user selectable)
AC operation	AC adapter, 90–260 VAC input, 12 V output to camera
Start-up time from sleep mode	Instant on

Environmental data	
Operating temperature range	–15°C to +50°C (+5°F to +122°F)
Storage temperature range	–40°C to +70°C (–40°F to +158°F)
Humidity (operating and storage)	IEC 60068-2-30/24 h 95% relative humidity +25° C to +40°C (+77°F to +104°F) / 2 cycles
EMC	• ETSI EN 301 489-1 (radio) • ETSI EN 301 489-17 • EN 61000-6-2 (Immunity) • EN 61000-6-3 (Emission) • FCC 47 CFR Part 15 B (Emission) • ICES-003
Radio spectrum	• ETSI EN 300 328 • FCC Part 15.247 • RSS-210
Magnetic fields	EN 61 000-4-8, Test level 5 for continuous field (severe industrial environment)
Encapsulation	IP 54 (IEC 60529)
Shock	25 g (IEC 60068-2-27)
Vibration	2 g (IEC 60068-2-6)
Safety	EN/UL/CSA/PSE 60950-1

Physical data	
Camera weight, incl. battery	0.855 kg (1.88 lb.)
Camera size (L × W × H)	106 × 201 × 125 mm (4.2 × 7.9 × 4.9 in.), with built-in lens pointing forward
Tripod mounting	UNC ¼"-20 (adapter needed)
Material	• Polycarbonate + acrylonitrile butadiene styrene (PC-ABS) • Thixomold magnesium • Thermoplastic elastomer (TPE)
Color	Graphite gray and black

P/N: 62103-1704
© 2016, FLIR Systems, Inc.
#62103-1704; r. /35939; en-US

Shipping information	
Packaging, type	Cardboard box
List of contents	• Infrared camera with lens • Battery (2 ea.) • Battery charger • Bluetooth headset • Camera lens cap • Calibration certificate • Hard transport case • IR lens, f = 10 mm, 45° • Memory card • Neckstrap • Power supply, incl. multi-plugs • Printed documentation • Sunshield • USB cable • Video cable
EAN-13	7332558012192
UPC-12	845188013295
Country of origin	Sweden

Supplies & accessories:

- 1196961; IR lens, f = 30 mm, 15° incl. case
- 1196960; IR lens, f = 10 mm, 45° incl. case
- T197215; Close-up 4× (100 µm) incl. case
- T197214; Close-up 2× (50 µm) incl. case
- T197408; IR lens, 76 mm (6°) with case and mounting support for T/B-200/400
- T197412; IR lens, 4 mm (90°) with case and mounting support for T/B2xx-4xx
- T197000; High temp. option +1200°C (+2192°F)
- T910814; Power supply, incl. multi plugs
- T197650; 2-bay battery charger, incl. power supply with multi plugs
- 1196398ACC; Battery
- T199361ACC; Battery Li-ion 7.2 V, 2.2 Ah, 16 Wh
- T911230ACC; Memory card SDHC 4 GB
- 1910423; USB cable Std A <-> Mini-B
- T198509; Cigarette lighter adapter kit, 12 VDC, 1.2 m/3.9 ft.
- 1910582ACC; Video cable
- T198370ACC; Hard transport case for FLIR T/B2xx-4xx
- T198495; Pouch for FLIR T6xx and T4xx series
- 1124545; Pouch
- T198493; Sun shield
- T198499; Neck strap
- T197771ACC; Bluetooth Headset
- T911093; Tool belt
- 19250-100; IR Window 2 in
- 19251-100; IR Window 3 in.
- 19252-100; IR Window 4 in.
- 19250-200; SS IR Window 2 in.
- 19251-200; SS IR Window 3 in.
- 19252-200; SS IR Window 4 in.
- T198586; FLIR Reporter Professional (license only)
- T198584; FLIR Tools
- T198583; FLIR Tools+ (download card incl. license key)
- DSW-10000; FLIR IR Camera Player
- APP-10002; FLIR Tools Mobile (Android Application)

P/N: 62103-1704
© 2016, FLIR Systems, Inc.
#62103-1704; r. /35939; en-US

- APP-10004; FLIR Tools (MacOS Application)
- T198697; FLIR ResearchIR Max + HSDR 4 (hardware sec. dev.)
- T199014; FLIR ResearchIR Max + HSDR 4 (printed license key)
- T199044; FLIR ResearchIR Max + HSDR 4 Upgrade (printed license key)
- T198696; FLIR ResearchIR Max 4 (hardware sec. dev.)
- T199013; FLIR ResearchIR Max 4 (printed license key)
- T199043; FLIR ResearchIR Max 4 Upgrade (printed license key)
- T198731; FLIR ResearchIR Standard 4 (hardware sec. dev.)
- T199012; FLIR ResearchIR Standard 4 (printed license key)
- T199042; FLIR ResearchIR Standard 4 Upgrade (printed license key)
- T199233; FLIR Atlas SDK for .NET
- T199234; FLIR Atlas SDK for MATLAB

Camera with built-in IR lens f=18 mm (25°)

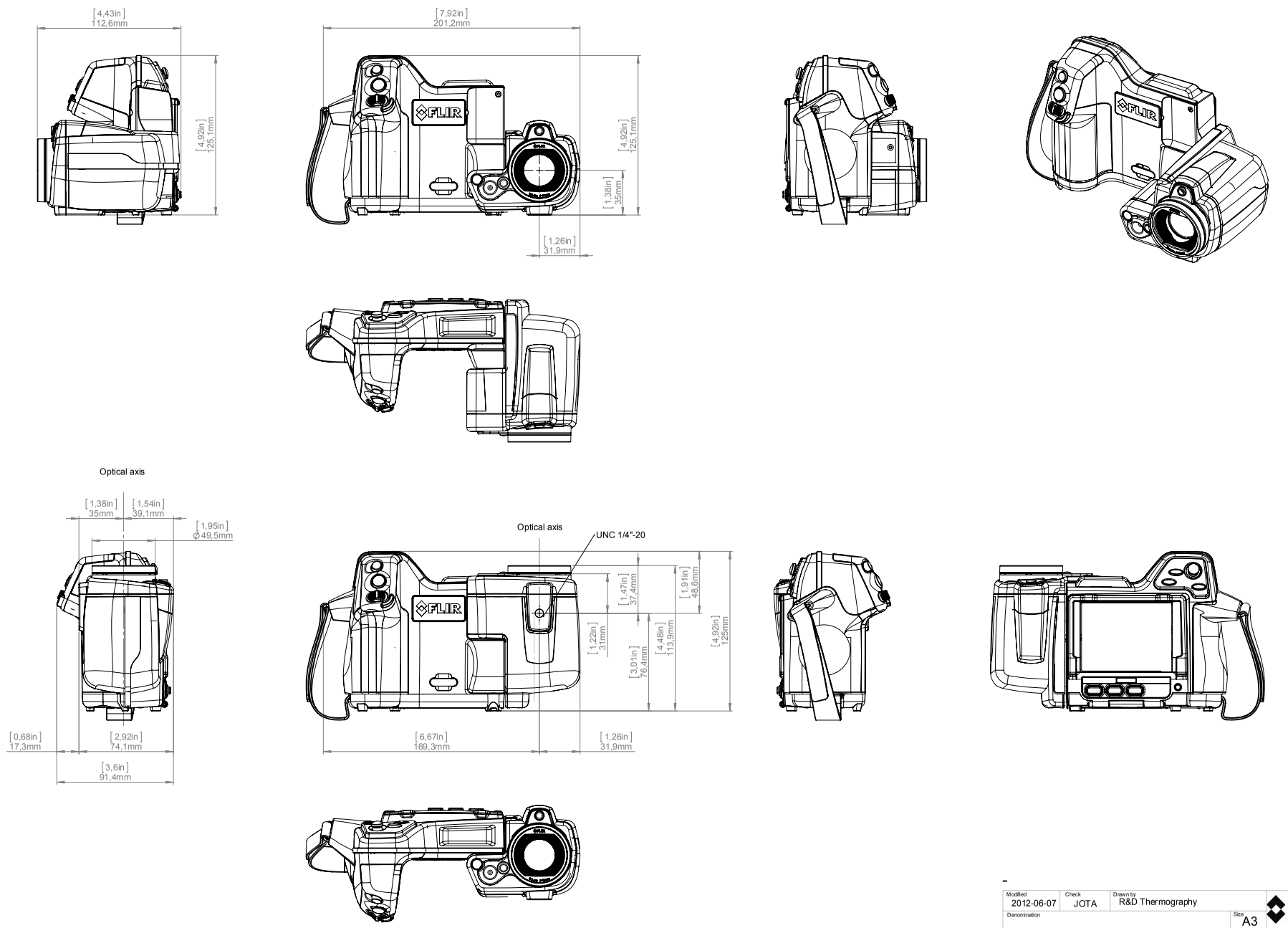

Modified	Check	Drawn by	
2012-06-07	JOTA	R&D Thermography	FLIR
Denomination		Size A3	
Basic Dimensions FLIR T4xx		Scale 1:2	Sheet 1(7)
		Drawing No. T127604	Size A

© 2012, FLIR Systems, Inc. All rights reserved worldwide. No part of this drawing may be reproduced, stored in a retrieval system, or transmitted in any form, or by any means, electronic, mechanical, photocopying, recording, or otherwise, without written permission from FLIR Systems, Inc. Specifications subject to change without further notice. Dimensional data is based on nominal values. Products may be subject to regional market considerations. License procedures may apply. Product may be subject to US Export Regulations. Please refer to exportquestions@flir.com with any questions. Diversion contrary to US law is prohibited.

Camera with Lens IR f=4 mm (90°) incl support

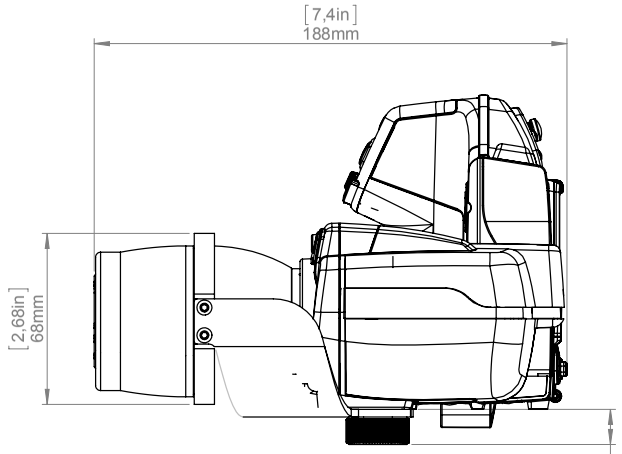

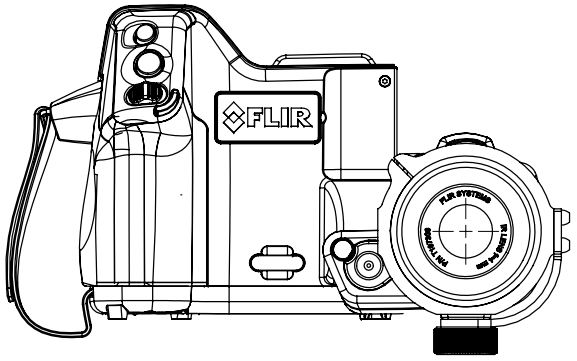

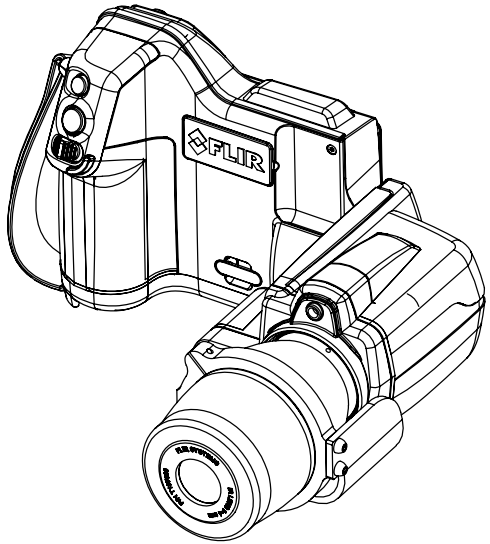

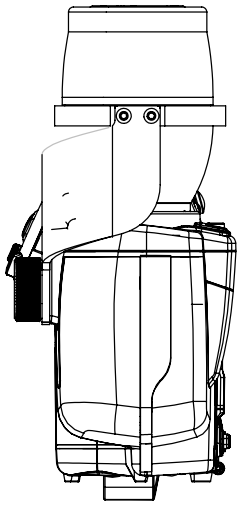

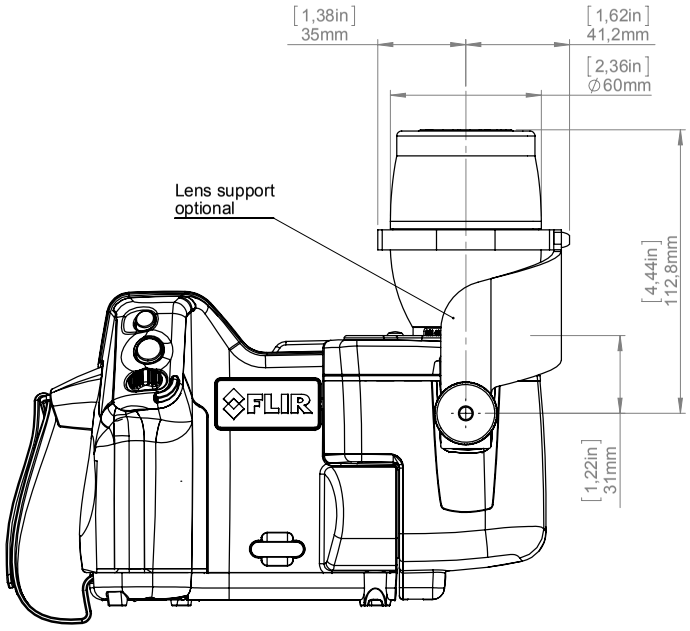

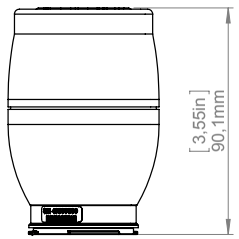

-

Modified	Check	Drawn by	
2012-06-07	JOTA	R&D Thermography	FLIR

Denomination

Basic Dimensions FLIR T4xx

Size	Sheet
A3	2(7)
Scale 1:2	
Drawing No. T127604	Size A

© 2012, FLIR Systems, Inc. All rights reserved worldwide. No part of this drawing may be reproduced, stored in a retrieval system, or transmitted in any form, or by any means, electronic, mechanical, photocopying, recording, or otherwise, without written permission from FLIR Systems, Inc. Specifications subject to change without further notice. Dimensional data is based on nominal values. Products may be subject to regional market considerations. License procedures may apply. Product may be subject to US Export Regulations. Please refer to exportquestions@flir.com with any questions. Diversion contrary to US law is prohibited.

Camera with Lens IR f=10 mm (45°)

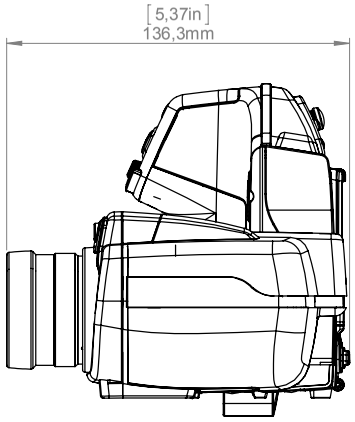

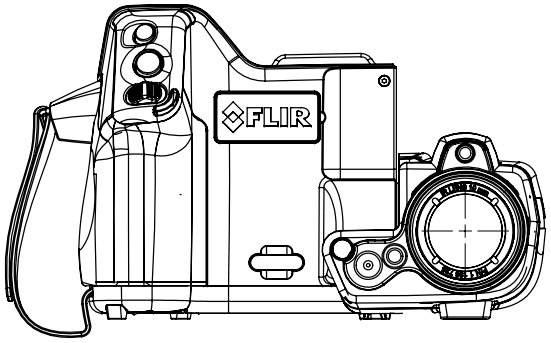

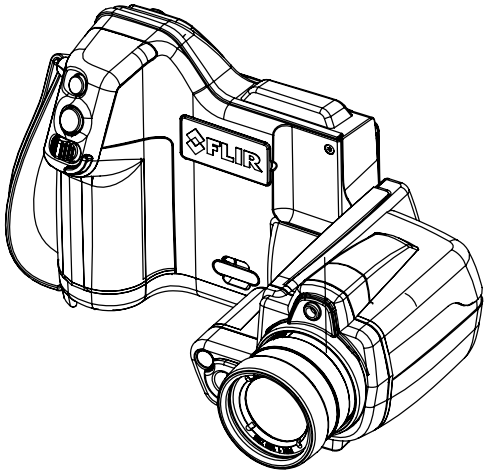

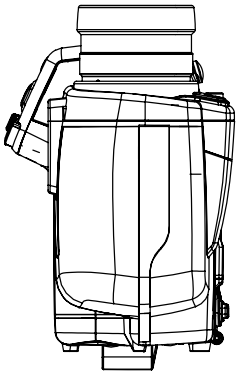

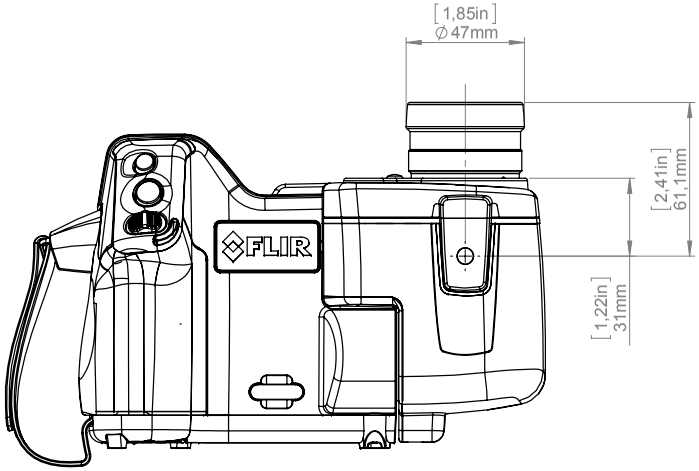

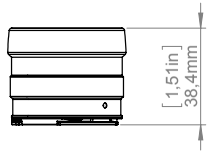

-

Modified	Check	Drawn by	
2012-06-07	JOTA	R&D Thermography	FLIR

Denomination

Basic Dimensions FLIR T4xx

Size	Sheet
A3	3(7)
Scale 1:2	
Drawing No. T127604	Size A

© 2012, FLIR Systems, Inc. All rights reserved worldwide. No part of this drawing may be reproduced, stored in a retrieval system, or transmitted in any form, or by any means, electronic, mechanical, photocopying, recording, or otherwise, without written permission from FLIR Systems, Inc. Specifications subject to change without further notice. Dimensional data is based on nominal values. Products may be subject to regional market considerations. License procedures may apply. Product may be subject to US Export Regulations. Please refer to exportquestions@flir.com with any questions. Diversion contrary to US law is prohibited.

Camera with Lens IR f=30 mm (15°)

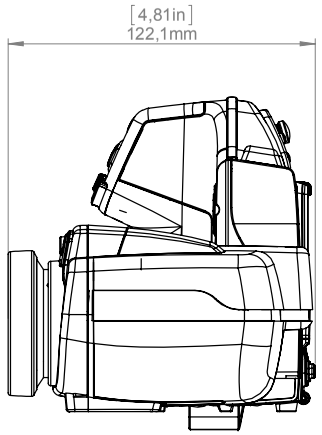

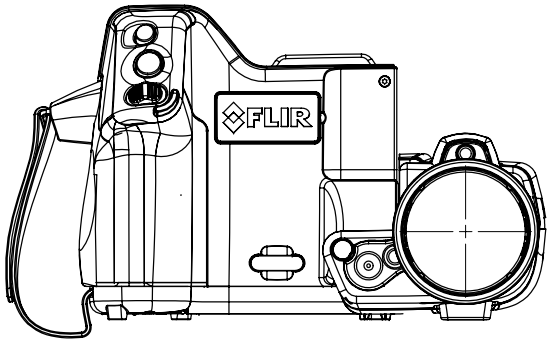

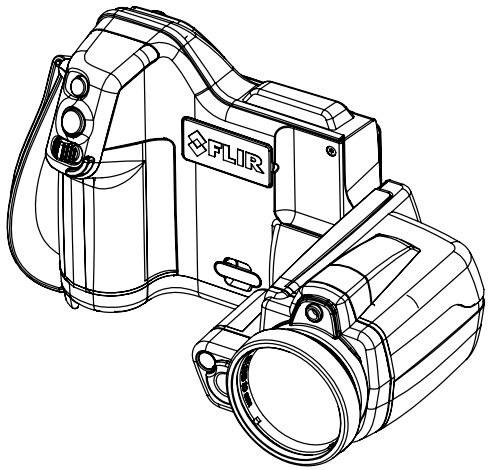

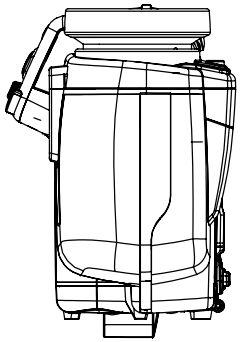

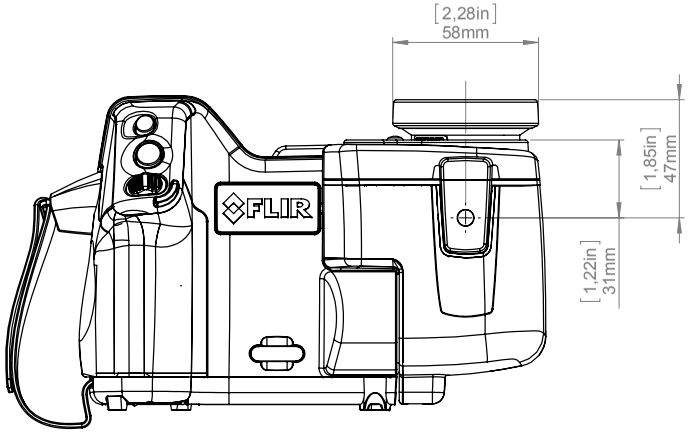

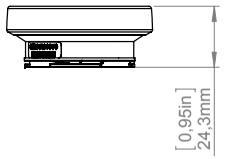

-

Modified	Check	Drawn by
2012-06-07	JOTA	R&D Thermography

Denomination

Basic Dimensions FLIR T4xx

Size	Sheet
A3	4(7)
Scale 1:2	
Drawing No. T127604	Size A

© 2012, FLIR Systems, Inc. All rights reserved worldwide. No part of this drawing may be reproduced, stored in a retrieval system, or transmitted in any form, or by any means, electronic, mechanical, photocopying, recording, or otherwise, without written permission from FLIR Systems, Inc. Specifications subject to change without further notice. Dimensional data is based on nominal values. Products may be subject to regional market considerations. License procedures may apply. Product may be subject to US Export Regulations. Please refer to exportquestions@flir.com with any questions. Diversion contrary to US law is prohibited.

Camera with Lens IR f=76 mm (6°) incl support

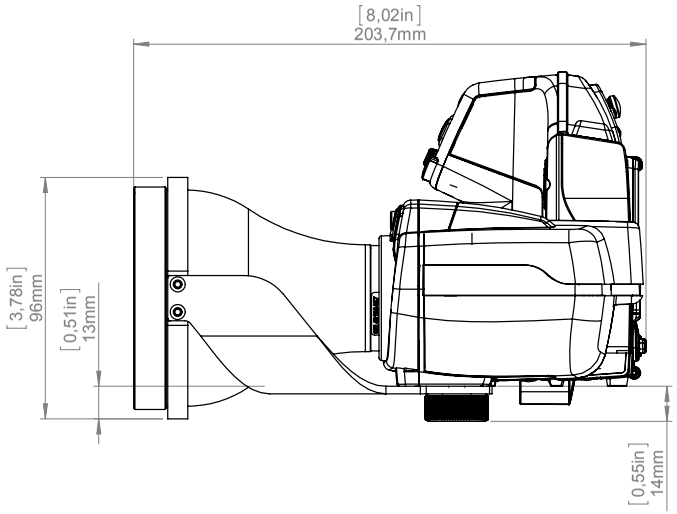

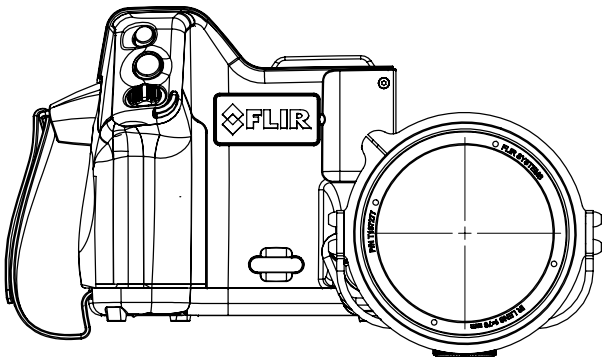

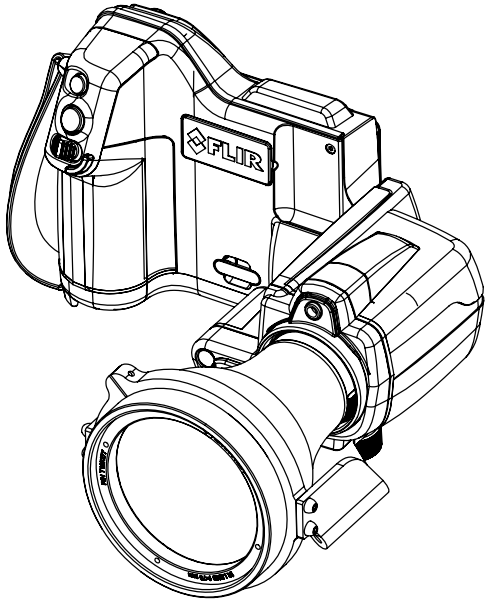

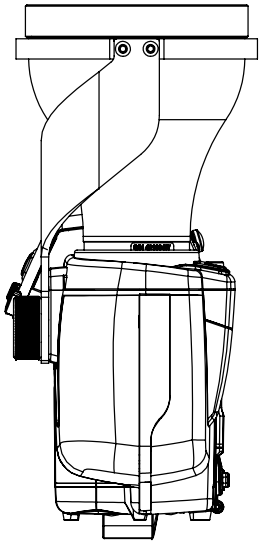

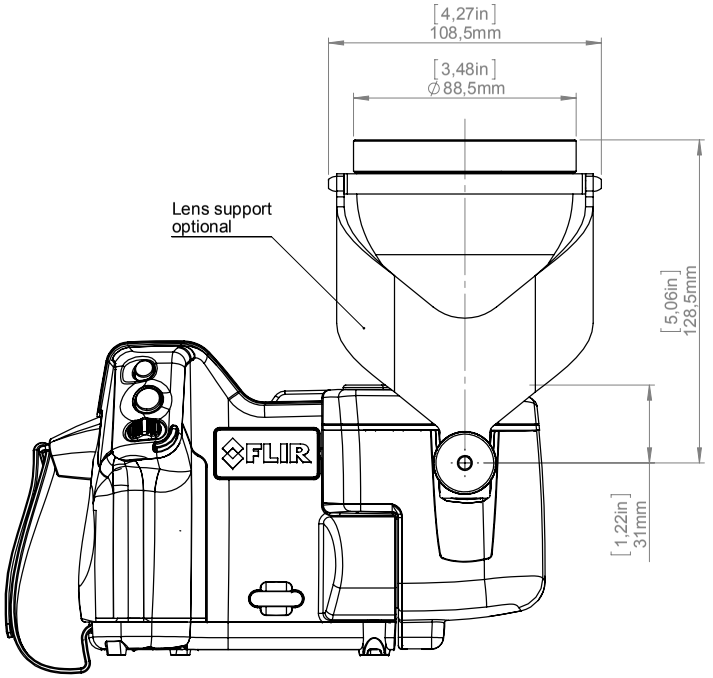

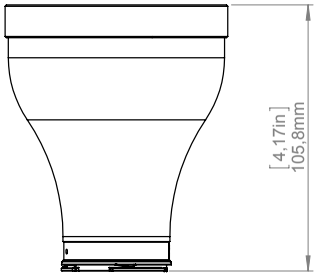

-

Modified	Check	Drawn by
2012-06-07	JOTA	R&D Thermography

Denomination

Basic Dimensions FLIR T4xx

Size	Sheet
A3	5(7)
Scale 1:2	
Drawing No. T127604	Size A

© 2012, FLIR Systems, Inc. All rights reserved worldwide. No part of this drawing may be reproduced, stored in a retrieval system, or transmitted in any form, or by any means, electronic, mechanical, photocopying, recording, or otherwise, without written permission from FLIR Systems, Inc. Specifications subject to change without further notice. Dimensional data is based on nominal values. Products may be subject to regional market considerations. License procedures may apply. Product may be subject to US Export Regulations. Please refer to exportquestions@flir.com with any questions. Diversion contrary to US law is prohibited.

Camera with Close-up lens 2X (50 µm)

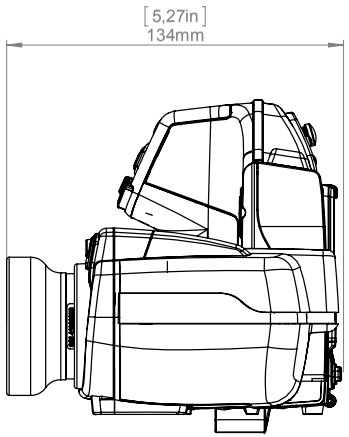

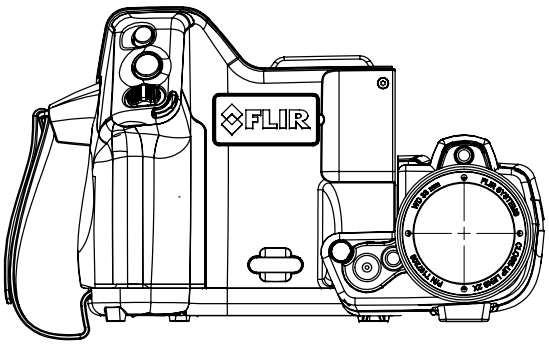

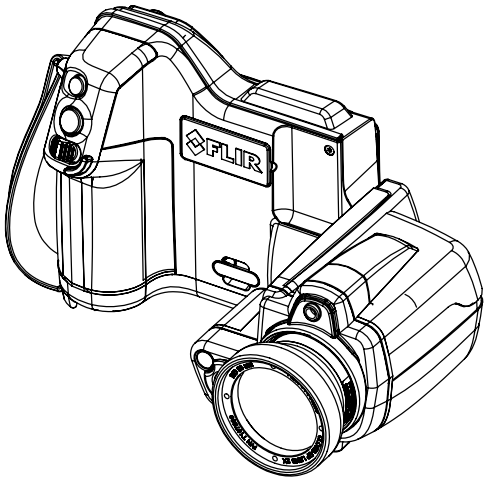

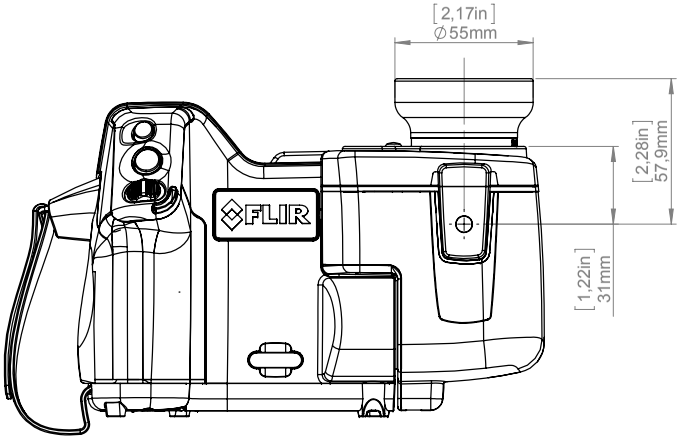

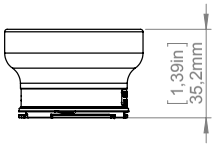

-

Modified	Check	Drawn by	
2012-06-07	JOTA	R&D Thermography	FLIR

Denomination

Basic Dimensions FLIR T4xx

Size	Sheet
A3	6(7)
Scale 1:2	
Drawing No. T127604	Size A

© 2012, FLIR Systems, Inc. All rights reserved worldwide. No part of this drawing may be reproduced, stored in a retrieval system, or transmitted in any form, or by any means, electronic, mechanical, photocopying, recording, or otherwise, without written permission from FLIR Systems, Inc. Specifications subject to change without further notice. Dimensional data is based on nominal values. Products may be subject to regional market considerations. License procedures may apply. Product may be subject to US Export Regulations. Please refer to exportquestions@flir.com with any questions. Diversion contrary to US law is prohibited.

Camera with Close-up lens 4X (100 µm)

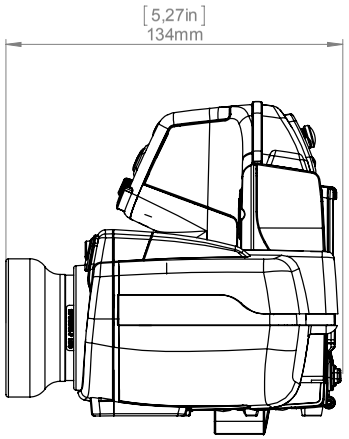

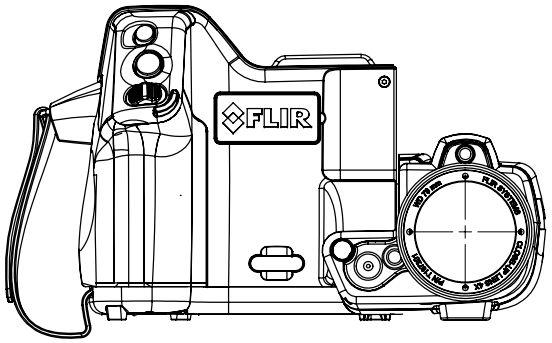

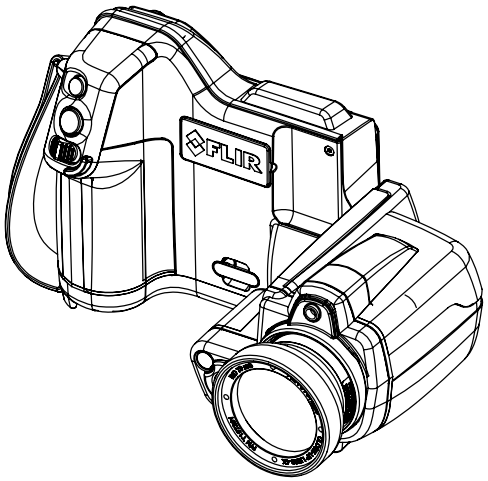

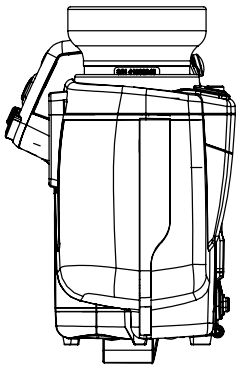

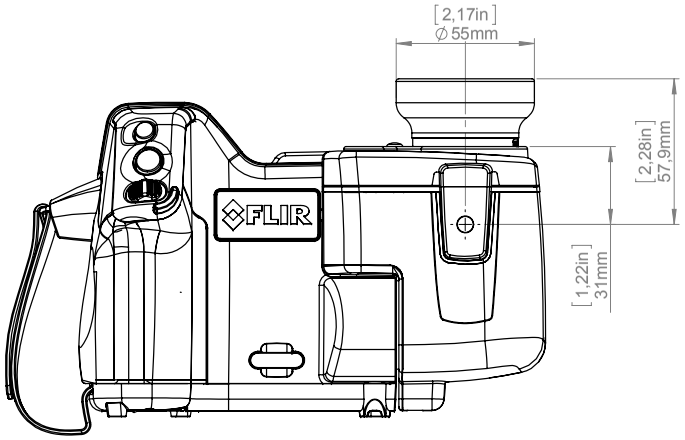

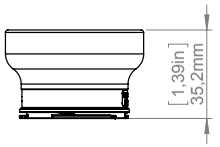

-

Modified	Check	Drawn by
2012-06-07	JOTA	R&D Thermography

Denomination

Basic Dimensions FLIR T4xx

Size	Sheet
A3	7(7)
Scale 1:2	
Drawing No. T127604	Size A

© 2012, FLIR Systems, Inc. All rights reserved worldwide. No part of this drawing may be reproduced, stored in a retrieval system, or transmitted in any form, or by any means, electronic, mechanical, photocopying, recording, or otherwise, without written permission from FLIR Systems, Inc. Specifications subject to change without further notice. Dimensional data is based on nominal values. Products may be subject to regional market considerations. License procedures may apply. Product may be subject to US Export Regulations. Please refer to exportquestions@flir.com with any questions. Diversion contrary to US law is prohibited.

October 15, 2012 AQ125912

CE Declaration of Conformity

This is to certify that the System listed below have been designed and manufactured to meet the requirements, as applicable, of the following EU-Directives and corresponding harmonising standards. The systems consequently meet the requirements for the CE-mark.

Directives:

Directive 2004/108/EC;	**Electromagnetic Compatibility**
Directive 2006/95/EC;	**"Low voltage Directive"** (Power Supply)
Directive 1999/5/EC	**"R&TTE on radio equipment and telecommunications terminal equipment"**
Directive 2002/96/EC	**Waste electrical and electronic equipment; WEEE** (As applicable)

Standards:

Emission:	**EN 61000-6-3;**	**Electro magnetic Compatibility Generic standards - Emission**
Immunity:	**EN 61000-6-2;**	**Electro magnetic Compatibility; Generic standards - Immunity**
Safety (Power Supply)**:**	**EN 60950;** (or other)	**Safety of information technology equipment**
Radio	**EN 301489**	

System: **FLIR T4XX series**

FLIR Systems AB
Quality Assurance

Björn Svensson
Director