THIS DRAWING IS UNPUBLISHED. RELEASED FOR PUBLICATION
© COPYRIGHT By – ALL RIGHTS RESERVED.

LOC	DIST
CM	00

REVISIONS

P	LTR	DESCRIPTION	DATE	DWN	APVD
	J	REVISED PER ECR-20-000721	04MAR2020	PC	SW

1. MATERIAL: CONNECTOR – NYLON UL94-V2 (WHITE)
   CONTACTS – 0.30[.012] THICK COPPER ALLOY
   BRIGHT TIN-LEAD 0.00203[.000080] MIN. THICK
   FOR CONTACTS 644512-2 THRU 2-644512-8.
   MATTE WHISKER MITIGATED TIN PLATE 0.00203[.000080] MIN. THICK
   OVER NICKEL UNDERPLATE FOR CONTACTS 3-644512-2 THRU
   5-644512-8.
2. CONTACTS ACCEPT 24 AWG WIRE WITH 1.52 [.060] MAXIMUM INSULATION DIAMETER.
3. CONTACTS MUST ACCEPT 0.64±0.03 [.025±.001] SQUARE POST AND REMAIN LOCKED IN POSITION.
4. IDENTIFICATION NUMBER FOR LAST CIRCUIT MAY NOT APPEAR ON ALL ASSEMBLIES.
5. DIMENSIONS IN BRACKETS ARE IN INCHES.
6. HOUSING FEATURES ARE: CLOSED END WITH LOCKING RAMP AND POLARIZING TAB.
7. OBSOLETE PARTS: OBSOLETE CIS STREAMLINING PER D.RENAUD/D.SINISI
8. OBSOLETE PARTS

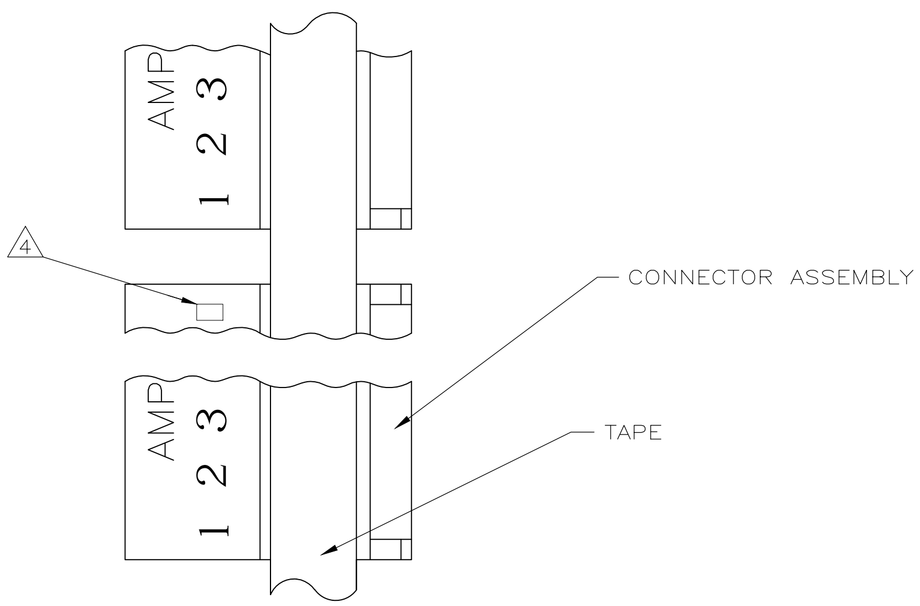

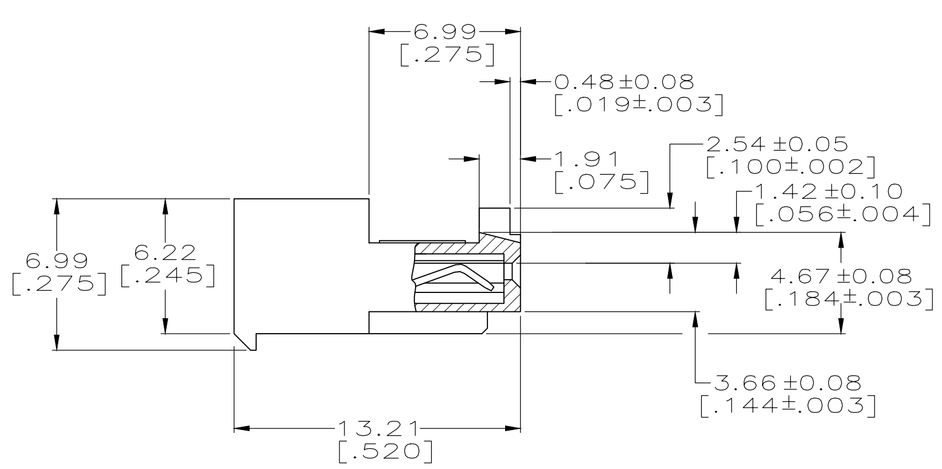

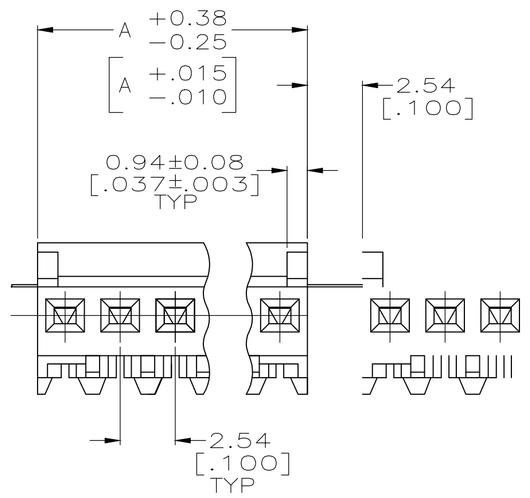

	DIM A	NO.OF POSN	ASSEMBLY
LEAD FREE	71.12 [2.800]	28	5-644512-8
	68.58 [2.700]	27	5-644512-7
	66.04 [2.600]	26	5-644512-6
	63.50 [2.500]	25	5-644512-5
	60.96 [2.400]	24	5-644512-4
	58.42 [2.300]	23	5-644512-3
	55.88 [2.200]	22	5-644512-2
	53.34 [2.100]	21	5-644512-1
	50.80 [2.000]	20	5-644512-0
	48.26 [1.900]	19	4-644512-9
	45.72 [1.800]	18	4-644512-8
	43.18 [1.700]	17	4-644512-7
	40.64 [1.600]	16	4-644512-6
	38.10 [1.500]	15	4-644512-5
	35.56 [1.400]	14	4-644512-4
	33.02 [1.300]	13	4-644512-3
	30.48 [1.200]	12	4-644512-2
	27.94 [1.100]	11	4-644512-1
	25.40 [1.000]	10	4-644512-0
	22.86 [.900]	9	3-644512-9
	20.32 [.800]	8	3-644512-8
	17.78 [.700]	7	3-644512-7
	15.24 [.600]	6	3-644512-6
	12.70 [.500]	5	3-644512-5
	10.16 [.400]	4	3-644512-4
	7.62 [.300]	3	3-644512-3
	5.08 [.200]	2	3-644512-2

	DIM A	NO.OF POSN	ASSEMBLY
7 SUPERSEDED	71.12 [2.800]	28	~~2-644512-8~~
	68.58 [2.700]	27	~~2-644512-7~~
	66.04 [2.600]	26	~~2-644512-6~~
	63.50 [2.500]	25	~~2-644512-5~~
	60.96 [2.400]	24	~~2-644512-4~~
	58.42 [2.300]	23	~~2-644512-3~~
	55.88 [2.200]	22	~~2-644512-2~~
	53.34 [2.100]	21	~~2-644512-1~~
	50.80 [2.000]	20	~~2-644512-0~~
	48.26 [1.900]	19	~~1-644512-9~~
	45.72 [1.800]	18	~~1-644512-8~~
	43.18 [1.700]	17	~~1-644512-7~~
	40.64 [1.600]	16	~~1-644512-6~~
	38.10 [1.500]	15	~~1-644512-5~~
	35.56 [1.400]	14	~~1-644512-4~~
	33.02 [1.300]	13	~~1-644512-3~~
8 SUPERSEDED	30.48 [1.200]	12	~~1-644512-2~~
	27.94 [1.100]	11	~~1-644512-1~~
	25.40 [1.000]	10	~~1-644512-0~~
7 SUPERSEDED	22.86 [.900]	9	~~644512-9~~
	20.32 [.800]	8	~~644512-8~~
	17.78 [.700]	7	~~644512-7~~
	15.24 [.600]	6	~~644512-6~~
	12.70 [.500]	5	~~644512-5~~
	10.16 [.400]	4	~~644512-4~~
OBSOLETE	7.62 [.300]	3	~~644512-3~~
	5.08 [.200]	2	~~644512-2~~

CONTAINS LEAD

THIS DRAWING IS A CONTROLLED DOCUMENT.

DIMENSIONS: mm [INCHES]

TOLERANCES UNLESS OTHERWISE SPECIFIED:
0 PLC ±
1 PLC ±
2 PLC ± 0.13 [.005]
3 PLC ±
4 PLC ±
ANGLES ±

MATERIAL 1 FINISH 1

DWN S. HOOVER 10-DEC-2004
CHK D. BOSSI 10-DEC-2004
APVD D. BOSSI 10-DEC-2004
PRODUCT SPEC
APPLICATION SPEC
WEIGHT
CUSTOMER DRAWING

TE Connectivity

NAME MTA-100 CONNECTOR ASSEMBLY, 24 AWG, TAPE MOUNTED, STANDARD

SIZE A1 CAGE CODE 00779 DRAWING NO C-644512 RESTRICTED TO

SCALE 5:1 SHEET 1 OF 1 REV J