Mallory Sonalert Products, Inc.

Part #: **SC250N**

Sales Outline Drawing

Revision: **H**

Specifications:

Sound Level Category	Loud
Mode of Operation	Continuous
Voltage Rating	60 to 250 VAC/DC
Frequency	2900 ± 500 Hz
Loudness @ 2 FT	88 to 100 dB(A) Typ.
Loudness @ Min Vdc	80 dB(A) @ 2 Feet and 60 Vdc
Loudness @ Max Vdc	90 dB(A) @ 2 Feet and 250 Vdc
Current Draw	5-18mA
Housing Material	6/6 Nylon, Color: Black
Storage Temperature	-40° to +85° C
Operating Temperature	-30° to +65° C
Panel Mounting	Recommended hole size is 1.25"(31.75mm). Thread front will fit standard 30mm(1.181") hole.
Knurled Nut	Used to attach part to panel. The max recommended torque is 10 in-lbs.
Weight (Typical)	1.6 oz (45g)
NEMA 3R,4X, & 12	Approved with use of ACC03.
Options	Please contact factory.

Dimensions: Inches (mm)

cUL Recognized

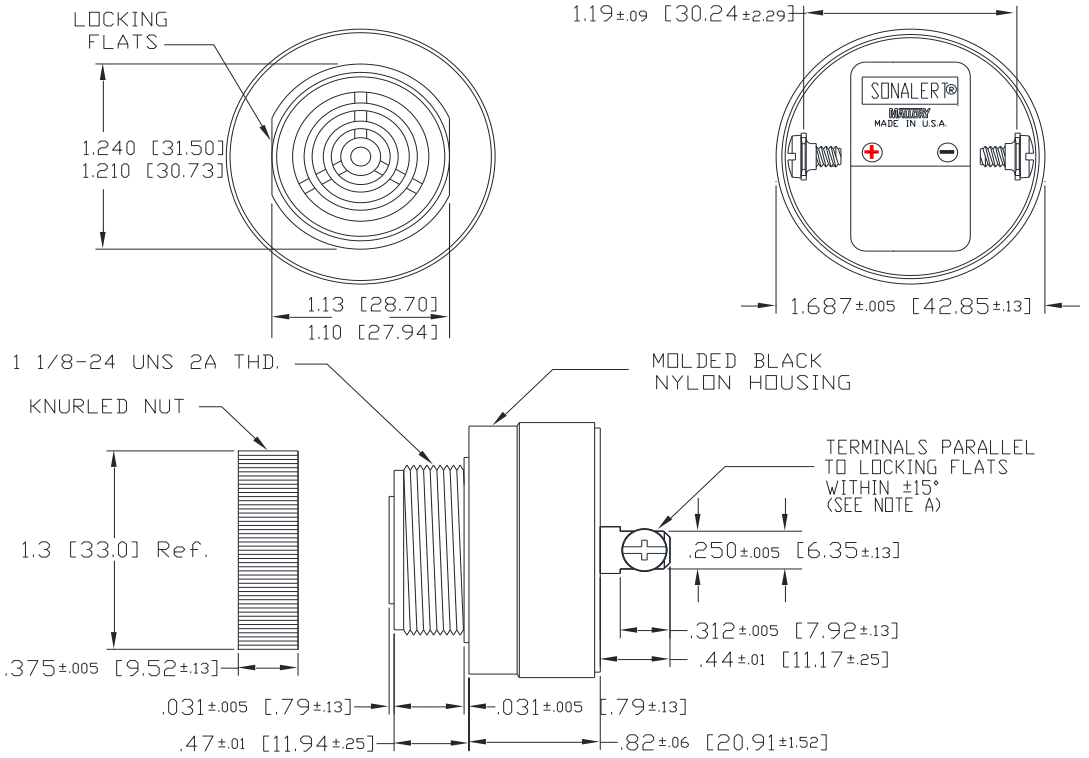

NOTE A: TERMINALS-.032 BRASS TIN PLATED, TAPPED FOR #6-32 SCREW. TWO #6-32 NICKEL PLATED BRASS SCREWS INCLUDED. WILL ACCEPT 1/4" QUICK CONNECT.

NOTE B: MOUNTING- REMOVE BLACK PLASTIC NUT AND INSERT THREADED FRONT THROUGH 1.25" HOLE PUNCHED IN PANEL, IF ORIENTATION IS NEEDED, NOTE LOCKING FLATS ON DRAWING. SCREW NUT BACK ON. DO NOT OVERTIGHTEN.