BUD	PART NAME	EXTRUDED ALUMINUM IP65 PCB ENCLOSURES	PART No.	EXN-23366 (SEE TABULATION FOR COMBINATIONS)	REVISION DATE	10-23-15

PART NUMBER	ALUM. COVER	PLASTIC COVER	BODY COLOR
EXN-23366-BK	BLACK	-	BLACK
EXN-23366-BKP	-	BLACK	BLACK
EXN-23366-BL	BLACK	-	BLUE
EXN-23366-BLP	-	TRANSLUCENT BLUE	BLUE
EXN-23366-GD	BLACK	-	GOLD
EXN-23366-GDP	-	CLEAR	GOLD
EXN-23366-RD	BLACK	-	RED
EXN-23366-RDP	-	IR RED	RED
EXN-23366-SV	BLACK	-	SILVER
EXN-23366-SVP	-	CLEAR	SILVER

MATERIAL: ALUMINUM EXTRUSION BODY PROVIDED WITH ALUMINUM COVER (2X) AND GASKETS OR POLYCARBONATE COVER (2X) AND GASKETS - NOT ASSEMBLED

DRAWING FOR REFERENCE

WE RESERVE THE RIGHT TO MAKE CHANGES TO OUR STANDARD PRODUCTS. PLEASE CONSULT WITH BUD INDUSTRIES PRIOR TO USING THIS DRAWING FOR DESIGN PURPOSE.

DIMENSIONS ARE INCH[MM]

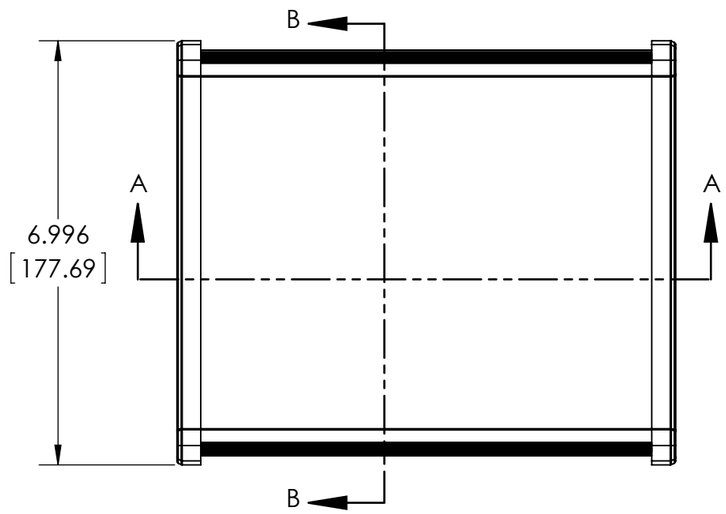

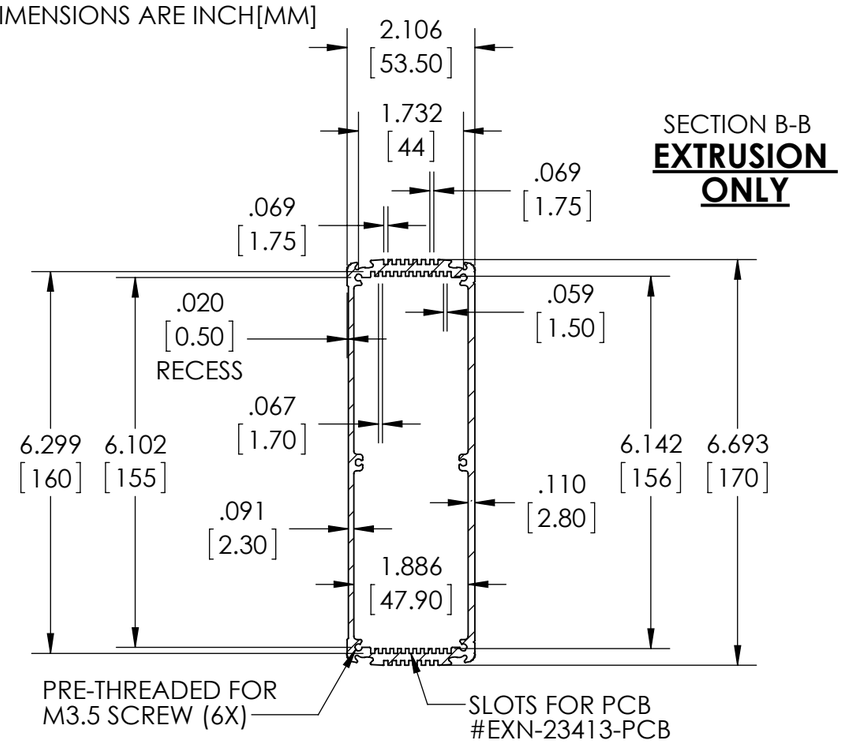

SECTION B-B
EXTRUSION ONLY

DIE CAST ALUMINUM COVER

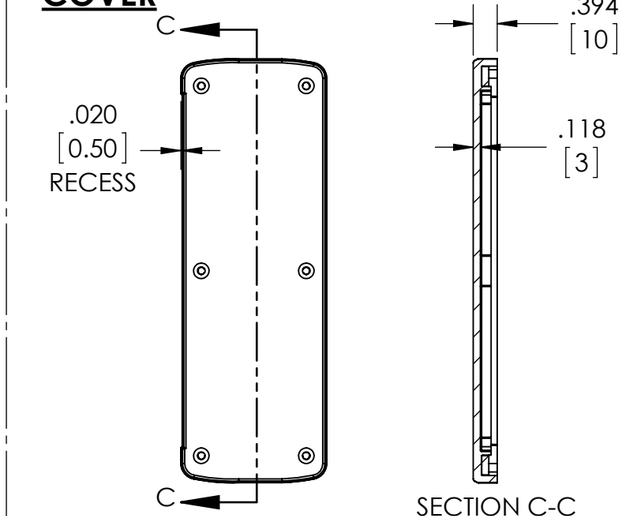

SECTION C-C

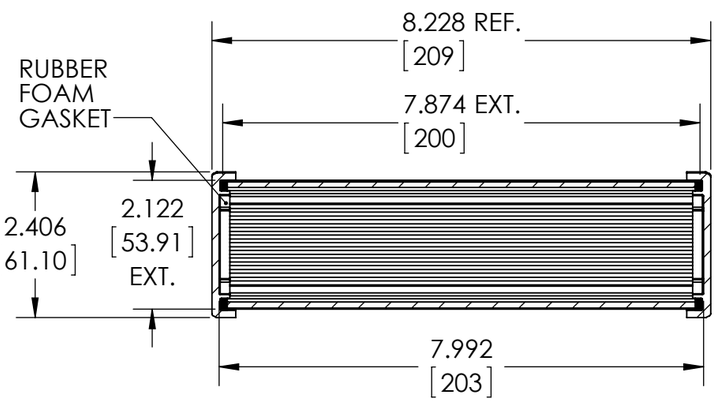

SECTION A-A
SCALE 1 : 2.5

DIMENSIONS MAY VARY DEPENDING ON THE COMPRESSION OF THE GASKETS

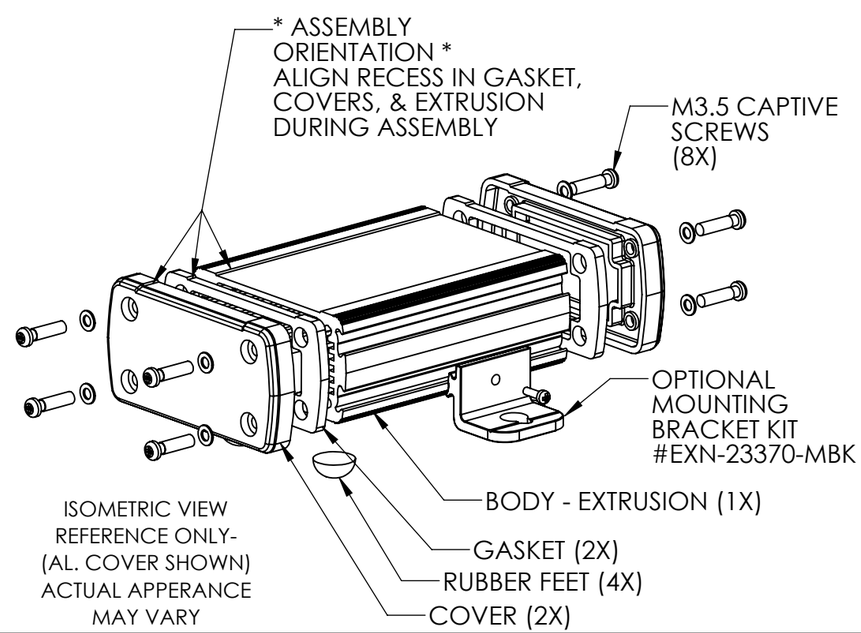

ISOMETRIC VIEW
REFERENCE ONLY-
(AL. COVER SHOWN)
ACTUAL APPERANCE
MAY VARY

PLASTIC COVER

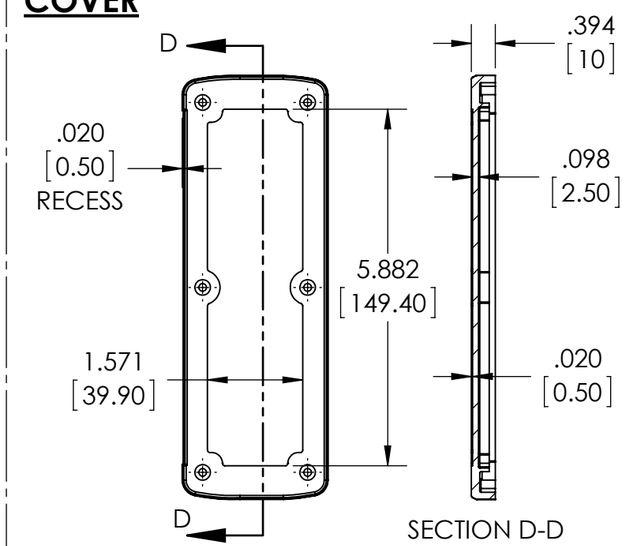

SECTION D-D