THIS DRAWING IS UNPUBLISHED. RELEASED FOR PUBLICATION 20
© COPYRIGHT 20 BY TYCO ELECTRONICS CORPORATION. ALL RIGHTS RESERVED.

PART NUMBER	REV	FIRST USED	POWER UNIT	FEED TYPE	DESCRIPTION
1852858-1	B	122500-1	LEADMAKER	AIR FEED	CUTS CARRIER
1852858-2	B	565435-5	BENCH MODEL K	AIR FEED	CUTS CARRIER
1852858-3	B	354500-1	BENCH MODEL G	AIR FEED	CUTS CARRIER
1852858-6	B	122500-1	LEADMAKER	AIR FEED	CONTINUOUS CARRIER
7-1852858-7	B	-	-	-	SPARE PARTS

1. RECOMMENDED SPARE PARTS
2. GREASE LIGHTLY
3. GUARD MUST BE IN PLACE WHEN OPERATING APPLICATOR IN A BENCH MACHINE

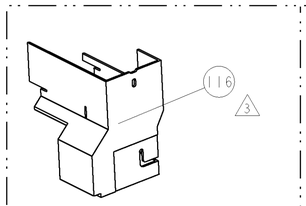

AMP-O-LECTRIC TERM GUARD

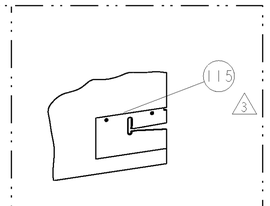

G TERMINATOR GUARD

TERMINAL NAME: PLUG CONTACT

TE PN	ANDERSON
1949986	02863
-	-
-	-
-	-
-	-
-	-
-	-
-	-
-	-
WIRE STRIP LENGTH .250-.265	TERM APPL SPEC NONE

ANDERSON TERMINAL - TE CRIMP SPECS

PAD LTR	CRIMP HEIGHT	WIRE SIZE
A	.133+.002/-.002[3.38mm+.05/-.05]	12AWG
B	.124+.002/-.002[3.15mm+.05/-.05]	14AWG
C	.119+.002/-.002[3.02mm+.05/-.05]	16AWG
D		-

CRIMP	SIZE	TYPE	RANGE
WIRE	.180 [4.57mm]	F	12-16 AWG
INSUL	-	-	-

FEED	APPLICATOR INSTRUCTIONS	SET UP GAGE
.500	408-8040	458637-1

LOC	DIST
A	66

REVISIONS

P	LTR	DESCRIPTION	DATE	DWN	APVD
	A	RELEASED	14SEP2009	ROW	GEB
	B	ECR-09-025336	18NOV2009	MY	GB

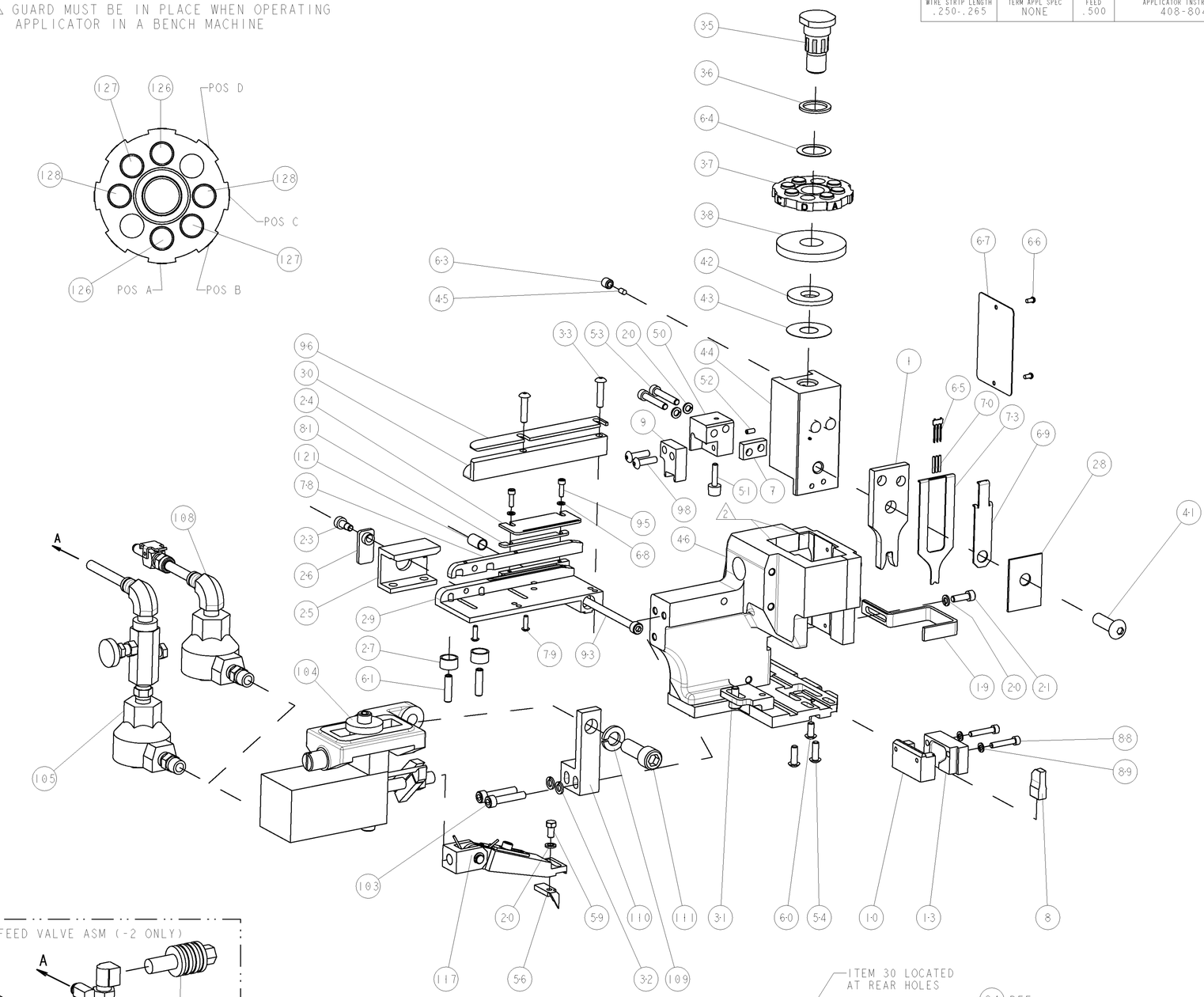

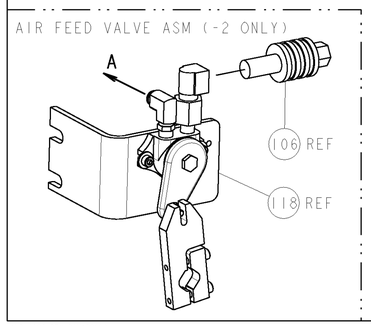

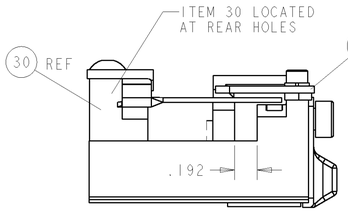

FEED TRACK POSITION GUIDE BY WIRE BARREL

-77	-6	-3	-2	-1	U/M	PART NO	DESCRIPTION	ITEM NO
-	2	2	2	2	-	3-354779-5	PIN, WIRE DISC, .3165	128
-	2	2	2	2	-	2-354779-6	PIN, WIRE DISC, .3120	127
-	2	2	2	2	-	354779-9	PIN, WIRE DISC, .3035	126
-	1	1	1	1	-	1-22281-8	SPRING, COMPRESSION	121
-	-	-	REF	-	-	692655-6	AIR FEED VALVE ASSEMBLY	118
-	1	1	1	1	-	461062-1	FEED FINGER ASSEMBLY	117
3 -	-	-	REF	-	..	455749-1	GUARD WINDOW	116
3 -	-	REF	-	-	..	679532-1	INSERT, GUARD	115
-	1	1	1	1	-	3-21001-5	SCR, SKT HD CAP 3/8-16 X 1.000	111
-	1	1	1	1	-	459610-3	MOUNT, FEED BRACKET	110
-	1	1	1	1	-	21024-8	WASHER, SPRG LOCK, REG 3/8	109
-	1	1	-	1	-	692655-7	AIR FEED VALVE ASSEMBLY	108
-	-	-	REF	-	-	24024-2	VALVE, SHUT OFF	106
-	-	-	1	-	-	692655-5	AIR FEED VALVE ASSEMBLY	105
-	1	1	1	1	-	461065-1	ASSEMBLY, AIR FEED	104
-	2	2	2	2	-	3-21000-9	SCR, SKT HD CAP 10-32 X 1.000	103
-	2	2	2	2	-	2-21002-3	SCR, BTN SKT HD CAP 8-32 X .625	98
-	1	1	1	1	-	1633630-2	PLATE, STRIP GUIDE	96
-	2	2	2	2	-	1-21000-4	SCR, SKT HD CAP 4-40 X .375	95
-	1	1	1	1	-	8-21000-7	SCR, SKT HD CAP 10-32 X 2.500	93
-	2	2	2	2	-	21024-3	WASHER, SPRG LOCK, REG NO 6	89
-	2	2	2	2	-	2-21000-2	SCR, SKT HD CAP 6-32 X .750	88
-	1	1	1	1	-	693855-2	FRONT STRIP GUIDE	81
-	2	2	2	2	-	1-21002-4	SCR, BTN SKT HD CAP 4-40 X .375	79
-	1	1	1	1	-	1-189807-0	FENCE	78
-	1	1	1	1	-	1490525-2	DEPRESSOR, WIRE	73
-	1	1	1	1	-	4088040	SF APPL INST 408-8040	72
-	1	1	1	1	-	217238-1	GENERAL INSTRUCTION PKG	71
-	3	3	3	3	-	2-23147-2	SPRING, COMPRESSION	70
-	1	1	1	1	-	1490524-2	DEPRESSOR, SPACER	69
-	2	2	2	2	-	21024-2	WASHER, SPRG LOCK, REG NO 4	68
-	1	1	1	1	-	461264-1	PLATE, IDENTIFICATION	67
-	2	2	2	2	-	21017-2	SCREW, DRIVE	66
-	1	1	1	1	-	1424350-1	HOLDER, PIN, WIRED	65
-	1	1	1	1	-	986950-1	WASHER, FLAT PRECISION	64
-	1	1	1	1	-	21009-2	SCR, SET, SELF LOCKING 1/4-20 X .250	63
-	2	2	2	2	-	5-21006-6	SCR, SET, CUP POINT 10-32 X .750	61
-	1	1	1	1	-	22733-8	SCR, BHSC, SELF-LOCKING, 8-32 X .375	60
-	1	1	1	1	-	2-22603-0	SCR, HEX HD CAP 8-32 X .312	59
-	1	1	1	1	-	5-694433-0	FEED PAWL	56
-	2	2	2	2	-	2-21002-2	SCR, BTN SKT HD CAP 8-32 X .500	54
-	2	2	2	2	-	3-21000-1	SCR, SKT HD CAP 8-32 X 1.000	53
-	1	1	1	1	-	2-21008-1	SCR, SET, SELF LOCKING 1/4-20 X .250	52
-	1	1	1	1	-	811242-7	BUMPER, HOLD DOWN	51
-	1	1	1	1	-	1583893-4	HOLDER, SLUG BLADE	50
-	1	1	1	1	-	1-1633399-5	APPL., BASIC AIR FEED SUB ASSY	46
-	1	1	1	1	-	690191-1	PLUG,NYLON	45
-	1	1	1	1	-	455673-5	RAM, SIDE FEED	44
-	1	1	1	1	-	690125-1	SHIM SUB-ASSY	43
-	1	1	1	1	-	690124-1	WASHER, RAM (.115)	42
-	1	1	1	1	-	7-21002-9	SCR, BTN SKT HD CAP 5/16-24 X 1.00	41
-	1	1	1	1	-	690223-2	SPACER, INS.	38
-	1	1	1	1	-	354777-1	WIRE DISC, ASSEMBLY	37
-	1	1	1	1	-	22480-5	SPRING, COMPRESSION	36
-	1	1	1	1	-	690212-1	POST, RAM	35
-	2	2	2	2	-	2-21002-4	SCR, BTN SKT HD CAP 8-32 X .750	33
-	3	3	3	3	-	21024-5	WASHER, SPRG LOCK, REG NO 10	32
-	1	1	1	1	-	3-21000-4	SCR, SKT HD CAP 10-32 X .375	31
-	1	1	1	1	-	1633821-1	PLATE, FRONT STRIP GUIDE	30
-	1	1	1	1	-	1633629-4	PLATE, REAR STRIP GUIDE	29
-	1	1	1	1	-	1-455888-0	SPACER, CRIMPER	28
-	2	2	2	2	-	1-22284-0	SPRING, COMPRESSION	27
-	1	1	1	1	-	356835-1	LEVER, DRAG RELEASE	26
-	1	1	1	1	-	6-690754-2	DRAG, SPECIAL	25
-	1	1	1	1	-	2-690438-4	FRONT STRIP GUIDE	24
-	1	1	1	1	-	21989-8	SCR, SKT HD SHLDR 3/16 DIA X .250	23
-	1	1	1	1	-	2-21000-7	SCR, SKT HD CAP 8-32 X .500	21
-	4	4	4	4	-	21024-4	WASHER, SPRG LOCK, REG NO 8	20
-	-	1	1	-	-	1-458230-8	STRIPPER	19
1 -	1	-	-	-	-	1633814-1	BLOCK, SHEAR	13
1 -	-	1	1	1	-	1633815-1	PLATE, SHEAR	10
1 -	1	1	1	1	-	1-1583859-7	BLADE, SLUG	9
1	1	1	1	1	-	3-1633665-8	ANVIL, COMBINATION	8
-	1	1	1	1	-	3-240641-2	SPACER	7
1	1	1	1	1	-	7-1633305-4	CRIMPER, WIRE PREMIUM	1

THIS DRAWING IS A CONFIDENTIAL DOCUMENT OF TYCO ELECTRONICS CORPORATION. IT IS SUBJECT TO CHANGE AND THE CONTROLLING ENGINEERING ORGANIZATION SHOULD BE CONTACTED FOR THE LATEST REVISION.

DIMENSIONS: INCHES

TOLERANCES UNLESS OTHERWISE SPECIFIED:
0 PLC ±-
1 PLC ±0.1
2 PLC ±0.01
3 PLC ±0.001
4 PLC ±0.0001
ANGLES ±-

MATERIAL - -
FINISH - -

DWN R.O.WILSON 17JUL2009
CHK K.J.STAKEM 20JUL2009
APVD T.J.ELBIN 20JUL2009
PRODUCT SPEC - - -
APPLICATION SPEC - -
WEIGHT -

Tyco Electronics
Tyco Electronics
Harrisburg, PA 17105-3608

NAME SIDE FEED HDM APPLICATOR - -

SIZE	CAGE CODE	DRAWING NO	RESTRICTED TO
A1	00779	C-1852858	-

CUSTOMER DRAWING
SCALE 3:5 SHEET 1 OF 1 REV B

CUSTOMER ACCESSIBLE PRODUCTION DRAWING

AMP 4805 REV 31MAR2000
Pro/ENGINEER DRAWING