THIS COPY IS PROVIDED ON A RESTRICTED BASIS AND IS NOT TO BE USED IN ANY WAY DETRIMENTAL TO THE INTERESTS OF PANDUIT CORP.

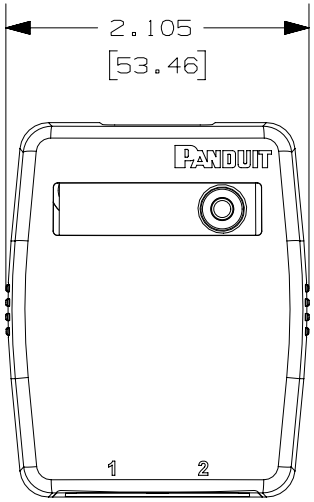

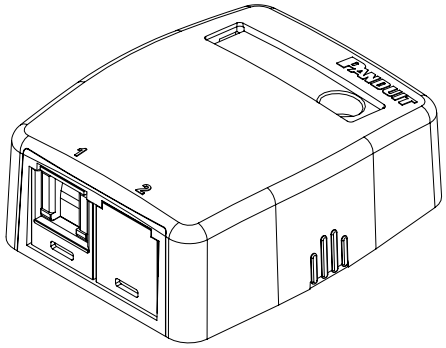

PANDUIT P/N	WEIGHT
JOQ1BH500 JOQ1BH500BL	1.08 LB/10 PCS 492.0 g/10 PCS

NOTES:
1. SEE CURRENT CATALOG FOR ADDITIONAL PART NUMBER SUFFIXES TO INDICATE COLOR AND/OR PACKAGE QUANTITY.
2. SEE CATALOG FOR A COMPLETE LIST OF PARTS APPLICABLE FOR USE WITH THIS PART.
3. DIMENSIONS IN PARENTHESES ARE IN METRIC.
4. BREAKOUTS DESIGNED TO ACCEPT LD3/LDPH3 and LD5/LDPH5 RACEWAY.
5. INCLUDED WITH BOX KIT:
   a. (1) BOX COVER
   b. (1) BOX BASE
   c. (1) PLT1M PAN-TY
   d. (1) LABEL AND LABEL COVER
   e. (1) SCREW (USED TO SECURE COVER TO BASE)
   f. (1) MAGNET (ATTACHED)
   g. (1) CJH5E88TG SHUTTERED JACK
   h. (1) CMB BLANK MODULE

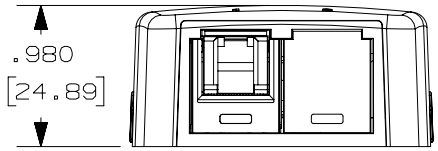

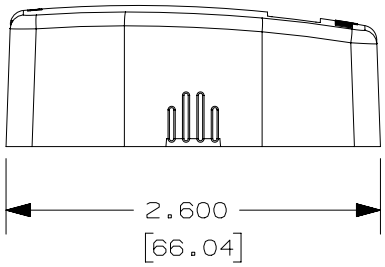

PART NUMBER: SEE TABLE

TITLE: MINI-COM 1 PORT SHUTTERED CAT 5e SURFACE MOUNT BOX KIT

CUSTOMER DRAWING

ITEM REVISION NAME: 15M583CI/14

DATASET FILE NAME: 15M583CI_DC08/14B

UNLESS OTHERWISE SPECIFIED, DIMENSIONAL TOLERANCES ARE: IN [mm]

.X ± .XXX ±

.XX ± ANGLES ±

THIRD ANGLE PROJECTION

MATERIAL:

DRAWING NUMBER: 15M583CI-08

DRAWN BY	DATE	CHK	SCALE	SHT 1 OF 2	SIZE
BJN	4-10-17	JCO	NONE		A

REV	DATE	BY	CHK	APR	DESCRIPTION	ECN
1	6-6-17	BJN	JCO	MMR	UPDATED WEIGHT	15M583CI-08
R	4-10-17	BJN	JCO	MMR	RELEASED TO PRODUCTION	15M583CI-08

D10100DA/14

THIS COPY IS PROVIDED ON A RESTRICTED BASIS AND IS NOT TO BE USED IN ANY WAY DETRIMENTAL TO THE INTERESTS OF PANDUIT CORP.

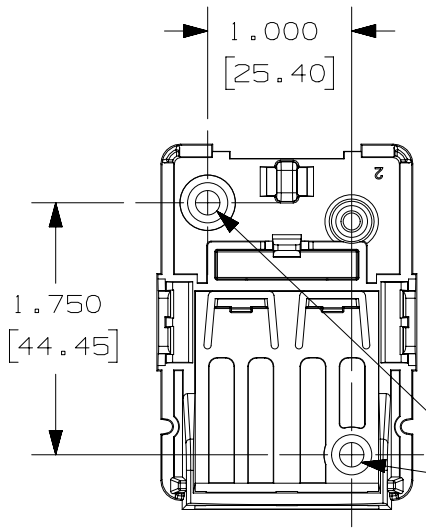

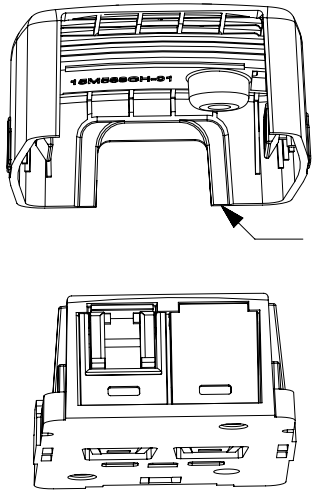

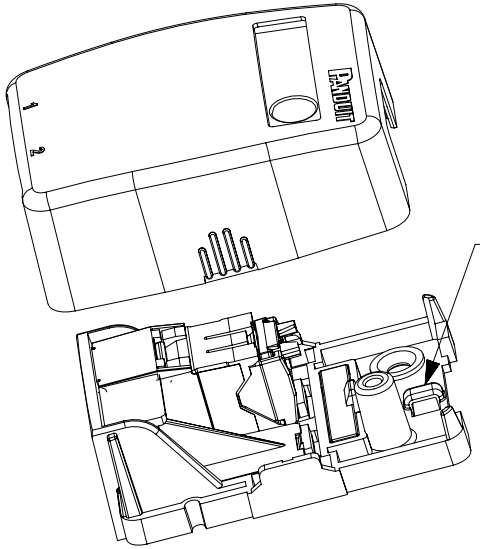

REV	DATE	BY	CHK	APR	DESCRIPTION	ECN
1	6-6-17	BJN	JCO	MMR	SEE SHEET 1 FOR REVISION HISTORY	15M583CI-08
R	4-10-17	BJN	JCO	MMR	SEE SHEET 1 FOR REVISION HISTORY	15M583CI-08

PART NUMBER: SEE TABLE

TITLE: MINI-COM 1 PORT SHUTTERED CAT 5e SURFACE MOUNT BOX KIT

CUSTOMER DRAWING

ITEM REVISION NAME: 15M583CI/14

DATASET FILE NAME: 15M583CI_DC08/14B

UNLESS OTHERWISE SPECIFIED, DIMENSIONAL TOLERANCES ARE: IN [mm]

.X ± .XXX ±

.XX ± ANGLES ±

THIRD ANGLE PROJECTION

MATERIAL:

DRAWING NUMBER: 15M583CI-08

DRAWN BY	DATE	CHK	SCALE		SIZE
BJN	4-10-17	JCO	NONE	SHT 2 OF 2	A

D10100DA/14