MATERIALS AND FINISHES:

BODY BRASS
PLATED NICKEL

MALE PIN BRASS
PLATED GOLD

INSULATOR TEFLON

JAM NUT BRASS
PLATED GOLD

LOCK WASHER PHOSPHOR BRONZE
PLATED GOLD

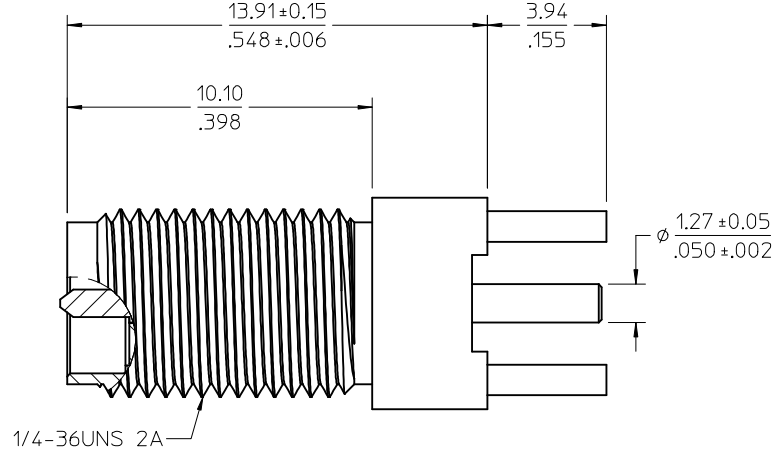

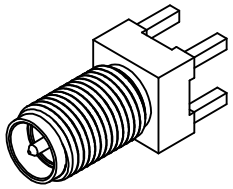

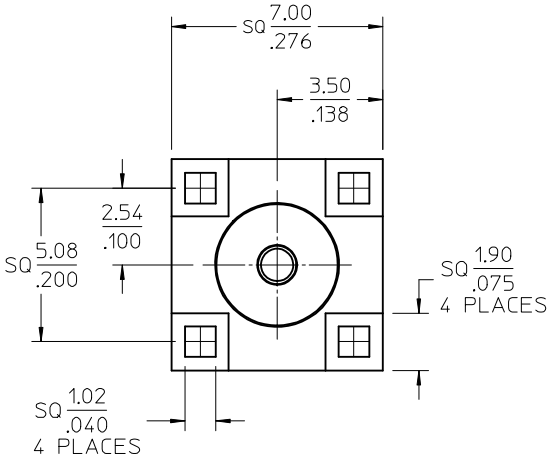

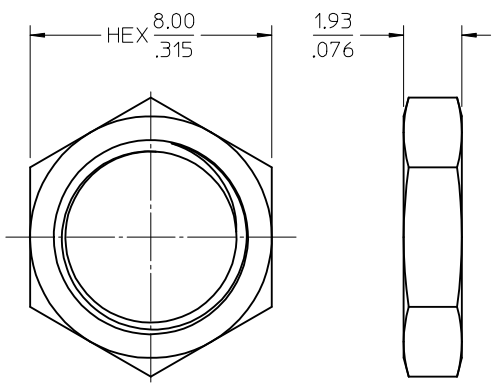

JAM NUT

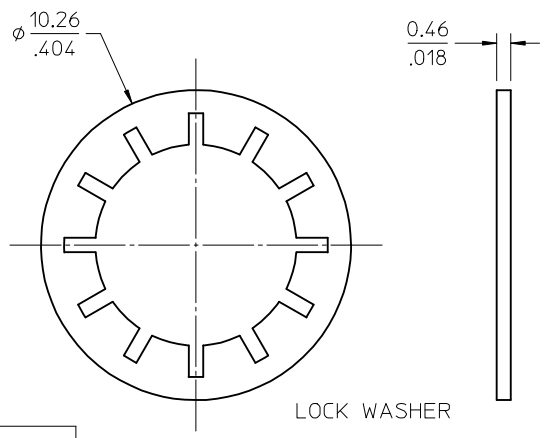

LOCK WASHER

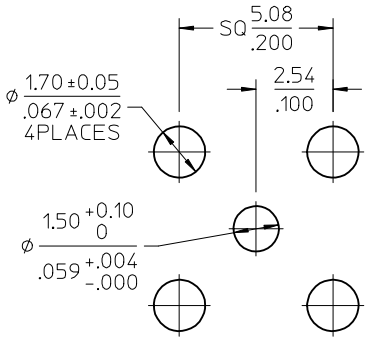

RECOMMENDED MOUNTING HOLE

PART NO.	DESCRIPTION
73251-5621	WITH JAM NUT & LOCK WASHER / TRAY PACKING
73251-5620	WITHOUT JAM NUT & LOCK WASHER / TRAY PACKING

REV	DESCRIPTION
A1	CHG:ADDED -5621 PER RF14-E115 EC NO: URF2014-0576 2014/04/09 DRWN:RYEH CHKD: APPR:MHUANG 2014/04/18

QUALITY SYMBOLS: E =0, E =0, E =0

GENERAL TOLERANCES (UNLESS SPECIFIED)

	mm	INCH
4 PLACES	± ---	± ---
3 PLACES	± ---	± ---
2 PLACES	± ---	± ---
1 PLACE	± ---	± ---
0 PLACE	±	±
ANGULAR ± 2 °		

DRAFT WHERE APPLICABLE MUST REMAIN WITHIN DIMENSIONS

DIMENSION STYLE: MM/IN
SCALE: 8:1
DESIGN UNITS: METRIC
THIRD ANGLE PROJECTION

		DATE
DRAWN BY	YCHENG	2011/11/07
CHECKED BY	VINCENT	2011/11/07
APPROVED BY	MHUANG	2012/05/28

TITLE: SMA JACK STR REV POL PCB TH SMA-J/PCB

molex

MATERIAL NO.: SEE TABLE
DOCUMENT NO.: SD-73251-562
SHEET NO.: 1 OF 1
SIZE: C

THIS DRAWING CONTAINS INFORMATION THAT IS PROPRIETARY TO MOLEX INCORPORATED AND SHOULD NOT BE NOT BE USED WITHOUT WRITTEN PERMISSION