PD57070
PD57070S

RF POWER TRANSISTORS
The LdmoST Plastic FAMILY

N-CHANNEL ENHANCEMENT-MODE LATERAL MOSFETs

- EXCELLENT THERMAL STABILITY
- COMMON SOURCE CONFIGURATION
- P_{OUT} = 70 W with 14.7 dB gain @ 945 MHz / 28V
- NEW RF PLASTIC PACKAGE

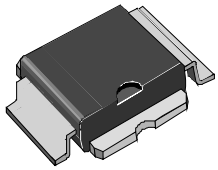

PowerSO-10RF
(formed lead)

ORDER CODE
PD57070

BRANDING
PD57070

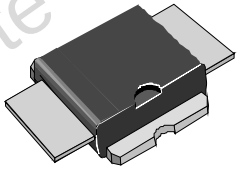

PowerSO-10RF
(straight lead)

ORDER CODE
PD57070S

BRANDING
PD57070S

DESCRIPTION

The PD57070 is a common source N-Channel, enhancement-mode lateral Field-Effect RF power transistor. It is designed for high gain, broad band commercial and industrial applications. It operates at 28 V in common source mode at frequencies of up to 1 GHz. PD57070 boasts the excellent gain, linearity and reliability of ST's latest LDMOS technology mounted in the first true SMD plastic RF power package, PowerSO-10RF. PD57070's superior linearity performance makes it an ideal solution for base station applications.

The PowerSO-10 plastic package, designed to offer high reliability, is the first ST JEDEC approved, high power SMD package. It has been specially optimized for RF needs and offers excellent RF performances and ease of assembly.

Mounting recommendations are available in ***www.st.com/rf/*** *(look for application note AN1294)*

Obsolete Product(s) - Obsolete Product(s)

ABSOLUTE MAXIMUM RATINGS (T_{CASE} = 25 °C)

Symbol	Parameter	Value	Unit
$V_{(BR)DSS}$	Drain-Source Voltage	65	V
V_{GS}	Gate-Source Voltage	± 20	V
I_D	Drain Current	7	A
P_{DISS}	Power Dissipation (@ Tc = 70°C)	95	W
Tj	Max. Operating Junction Temperature	165	°C
T_{STG}	Storage Temperature	-65 to +150	°C

THERMAL DATA (T_{CASE} =70 °C)

$R_{th(j-c)}$	Junction -Case Thermal Resistance	1.0	°C/W

ELECTRICAL SPECIFICATION (T_{CASE} = 25 °C)

STATIC

Symbol	Test Conditions			Min.	Typ.	Max.	Unit
$V_{DSS(BR)}$	V_{GS} = 0 V	I_{DS} = 1 mA		65			V
I_{DSS}	V_{GS} = 0 V	V_{DS} = 28 V				1	µA
I_{GSS}	V_{GS} = 20 V	V_{DS} = 0 V				1	µA
$V_{GS(Q)}$	V_{DS} = 28 V	I_D = 100 mA		2.0		5.0	V
$V_{DS(ON)}$	V_{GS} = 10 V	I_D = 3 A			0.8	0.95	V
G_{FS}	V_{DS} = 10 V	I_D = 3 A		2.5			mho
C_{ISS}	V_{GS} = 0 V	V_{DS} = 28 V	f = 1 MHz		91		pF
C_{OSS}	V_{GS} = 0 V	V_{DS} = 28 V	f = 1 MHz		58		pF
C_{RSS}	V_{GS} = 0 V	V_{DS} = 28 V	f = 1 MHz		3.8		pF

Ref. 7143417B

DYNAMIC

Symbol	Test Conditions	Min.	Typ.	Max.	Unit
P_{out}	V_{DD} = 28 V I_{DQ} = 250 mA f = 945 MHz	70			W
G_P	V_{DD} = 28 V I_{DQ} = 250 mA P_{OUT} = 70 W f = 945 MHz	13	14.7		dB
η_D	V_{DD} = 28 V I_{DQ} = 250 mA P_{OUT} = 70 W f = 945 MHz		50		%
Load mismatch	V_{DD} = 28 V I_{DQ} = 250 mA P_{OUT} = 70 W f = 945 MHz ALL PHASE ANGLES	5:1			VSWR

PIN CONNECTION

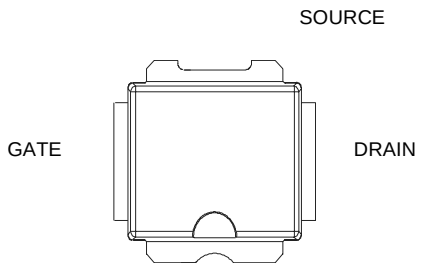

SC15200

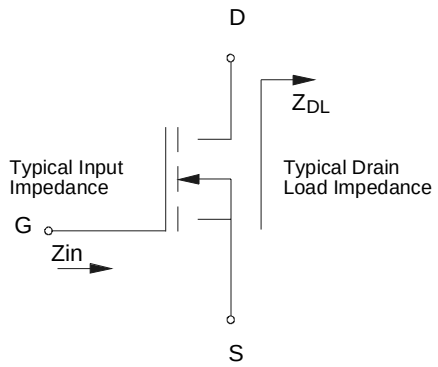

SC13140

IMPEDANCE DATA

PD57070S

FREQ. MHz	Z_{IN} (Ω)	Z_{DL}(Ω)
900	0.37 + j 0.60	1.7 - j 0.50
920	0.35 + j 0.60	1.6 - j 0.30
940	0.55 + j 0.40	1.5 - j 0.21
960	0.42 + j 0.30	1.4 - j 0.18
980	0.20 + j 0.20	1.2 - j 0.15

Obsolete Product(s)

TYPICAL PERFORMANCE *(PD55070S)*

Capacitance vs.Supply Voltage

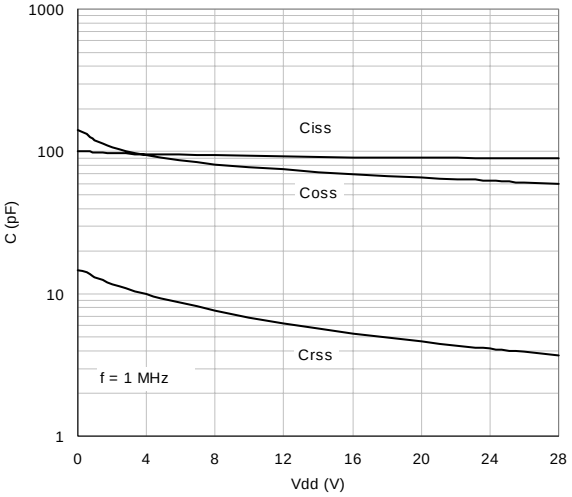

Drain Current vs. Gate-Surce Voltage

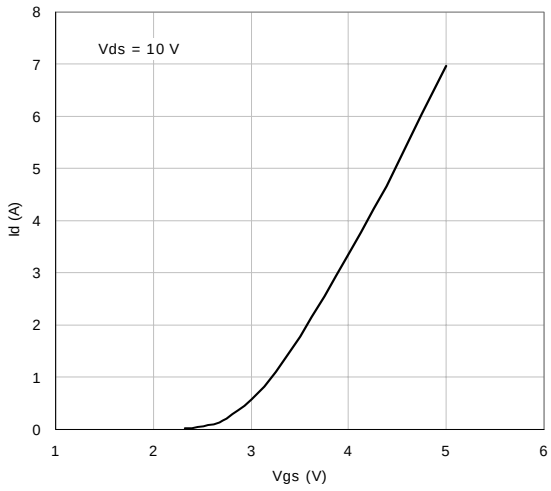

Gate-Source Voltage vs. Case Temperature

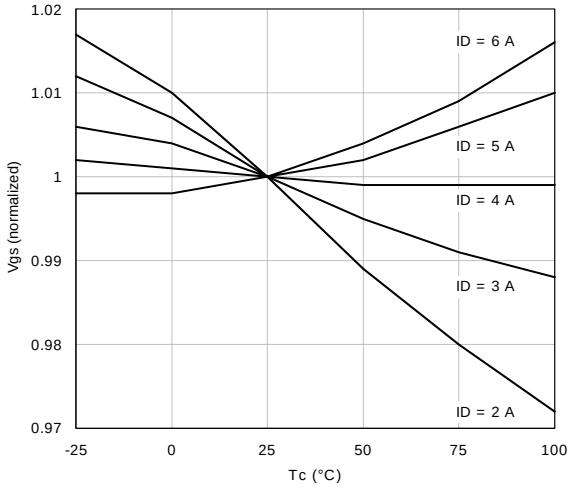

Output Power vs. Input Power

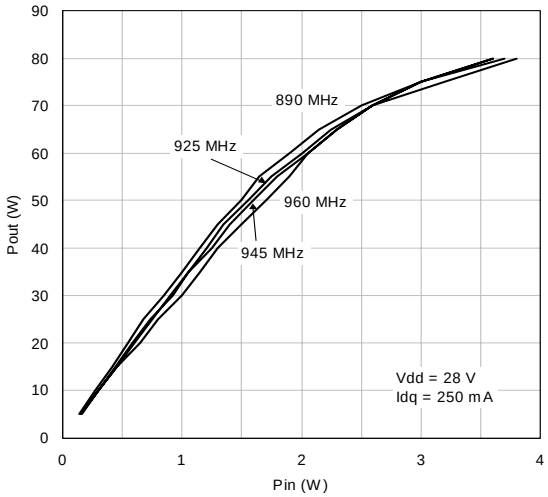

Power Gain vs. Output Power

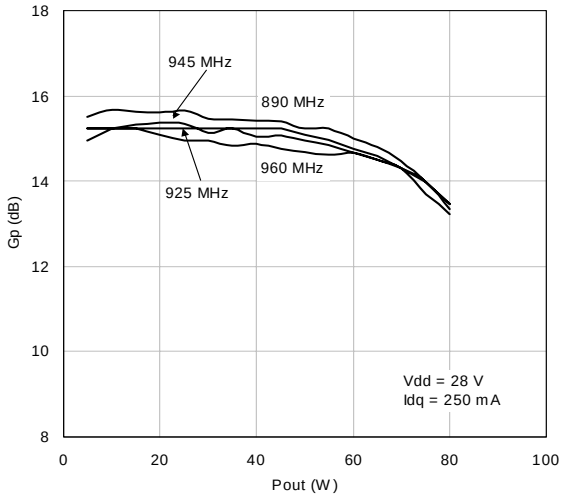

Efficiency vs. Output Power

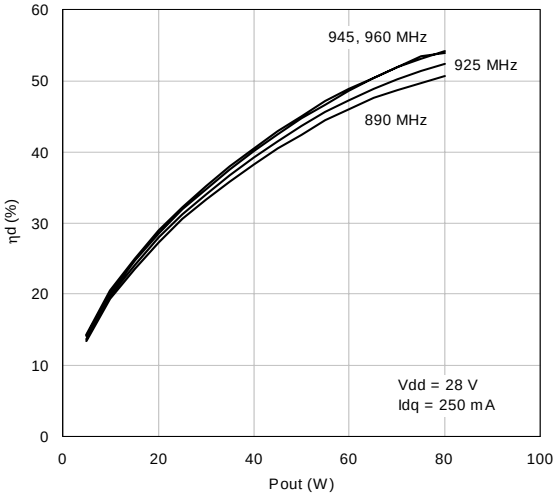

TYPICAL PERFORMANCE *(PD55070S)*

Input Return Loss vs. Output Power

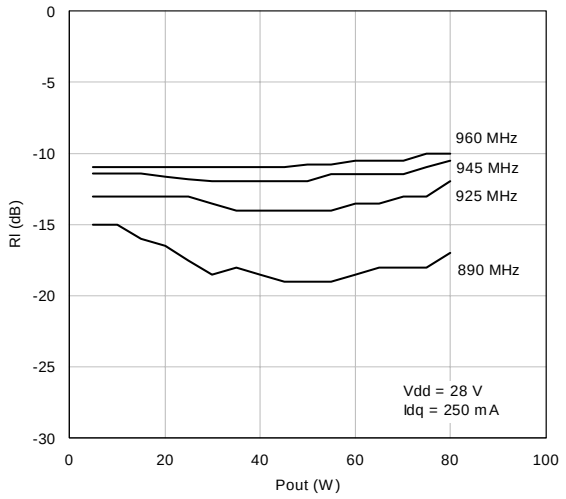

Output Power vs. Gate-Source Voltage

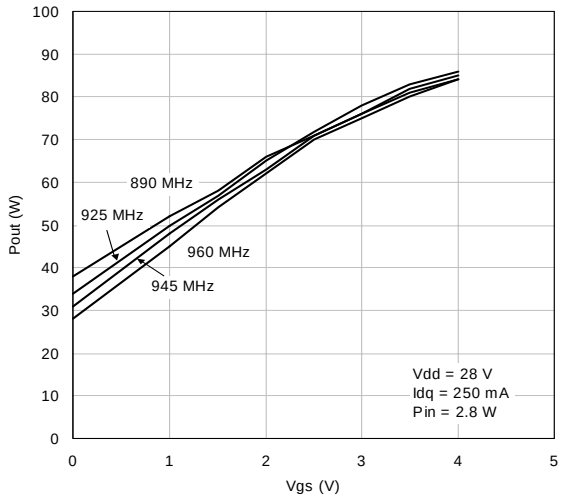

Output Power vs. Bias Current

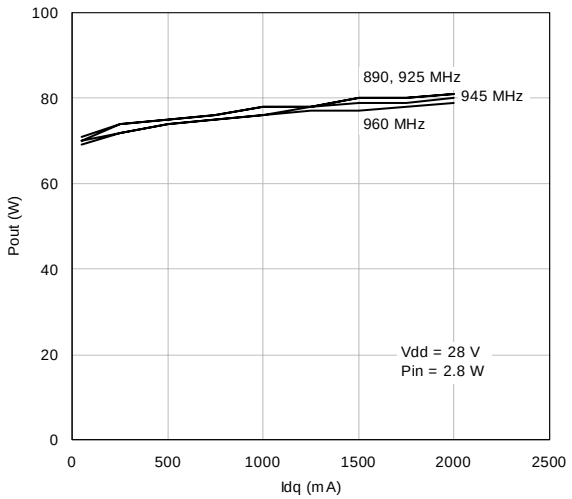

Efficiency vs. Bias Current

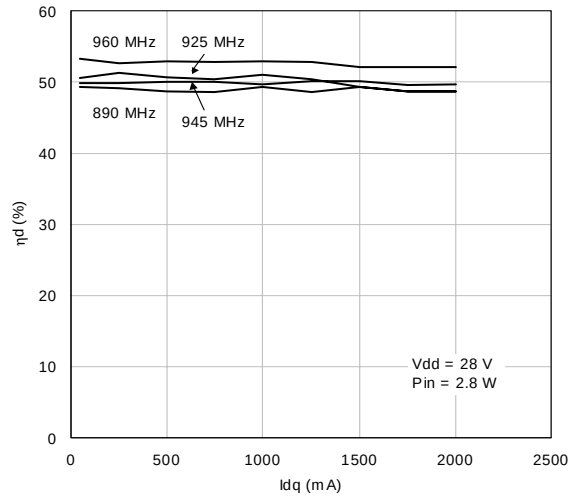

Output Power vs. Supply Voltage

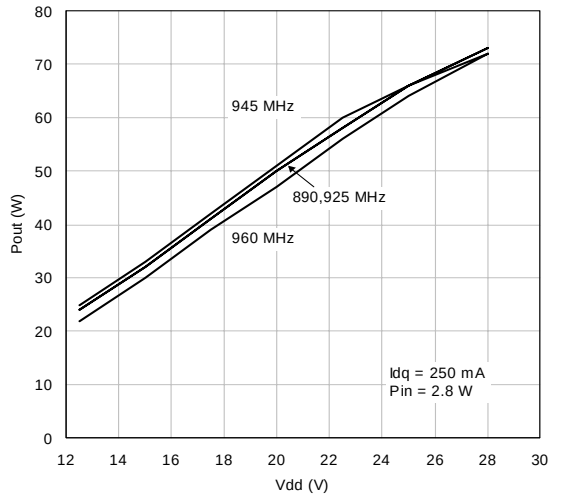

Efficiency vs. Supply Voltage

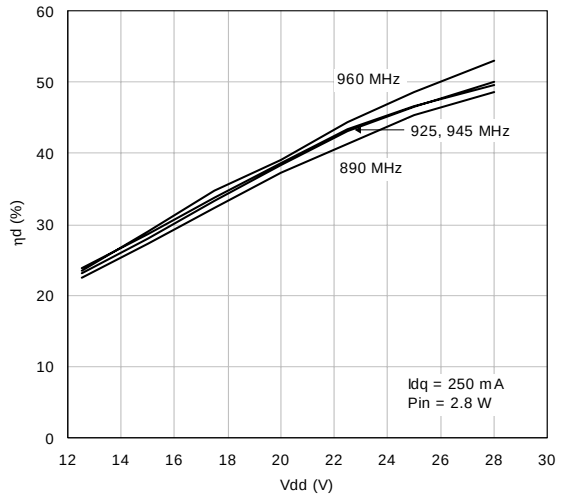

TEST CIRCUIT SCHEMATIC

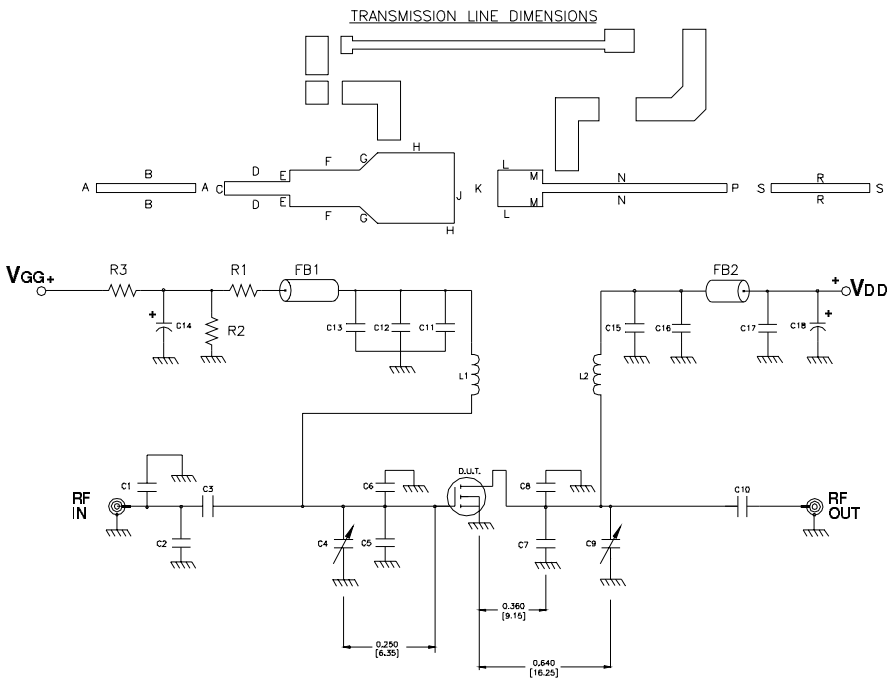

DIMENSION TABLE

DIM	IN	MM
A	0.076	1.93
B	0.925	23.50
C	0.116	2.95
D	0.570	14.48
E	0.100	2.54
F	0.609	15.47
G	0.544	13.82
H	0.667	16.94
J	0.616	15.65
K	0.316	18.03
L	0.396	10.06
M	0.120	3.05
N	1.610	40.89
P	0.076	1.93
R	0.925	23.50
S	0.076	1.93

NOTES
1. DIMENSIONS AT COMPONENT SYMBOLS ARE REFERENCE FOR COMPONENT PLACEMENT.
2. GAP BETWEEN GROUND & TRANSMISSION LINE = 0.056 [1.42] $^{-0.000\ [0.00]}_{+0.002\ [0.05]}$ TYP.
3. DIMENSIONS OF INPUT AND OUTPUT COMPONENT FROM EDGE OF TRANSMISSION LINES.

Obsolete Product(s) - Obso

TEST CIRCUIT COMPONENT PART LIST

COMPONENT	DESCRIPTION
L1,L2	INDUCTOR, 5 TURNS AIR WOUND #22AWG, ID 0.059{1.49}, NYLON COATED MAGNET WIRE
FB1,FB2	SHIELD BEAD SURFACE MOUNT EMI
R1	18 kΩ, 1 W SURFACE MOUNT CHIP RESISTOR
R2	4.7 MΩ, 1 W SURFACE MOUNT CHIP RESISTOR
R3	120 Ω, 2 W SURFACE MOUNT CHIP RESISTOR
C1,C2	3 pF ATC 100B SURFACE MOUNT CERAMIC CHIP CAPACITOR
C3,C10,C11,C15	47 pF ATC 100B SURFACE MOUNT CERAMIC CHIP CAPACITOR
C4,C9	0.8-8.0 pF GIGA TRIM VARIABLE CAPACITOR
C5,C6,C7,C8	7.5 pF ATC 100B SURFACE MOUNT CERAMIC CHIP CAPACITOR
C12	1000 pF ATC 700B SURFACE MOUNT CERAMIC CHIP CAPACITOR
C13,C17	0.1 µF, 500 V SURFACE MOUNT CERAMIC CHIP CAPACITOR
C14	10 µF, 50 V ALUMINUM ELECTROLYTIC RADIAL LEAD CAPACITOR
C16	100 pF ATC 100B SURFACE MOUNT CERAMIC CHIP CAPACITOR
C18	220 µF, 63 V ALUMINUM ELECTROLYTIC RADIAL LEAD CAPACITOR
BOARD	ROGER, ULTRA LAM 2000, THK 0.030”, εr = 2.55 2oz. ED Cu 2 SIDES.

TEST CIRCUIT

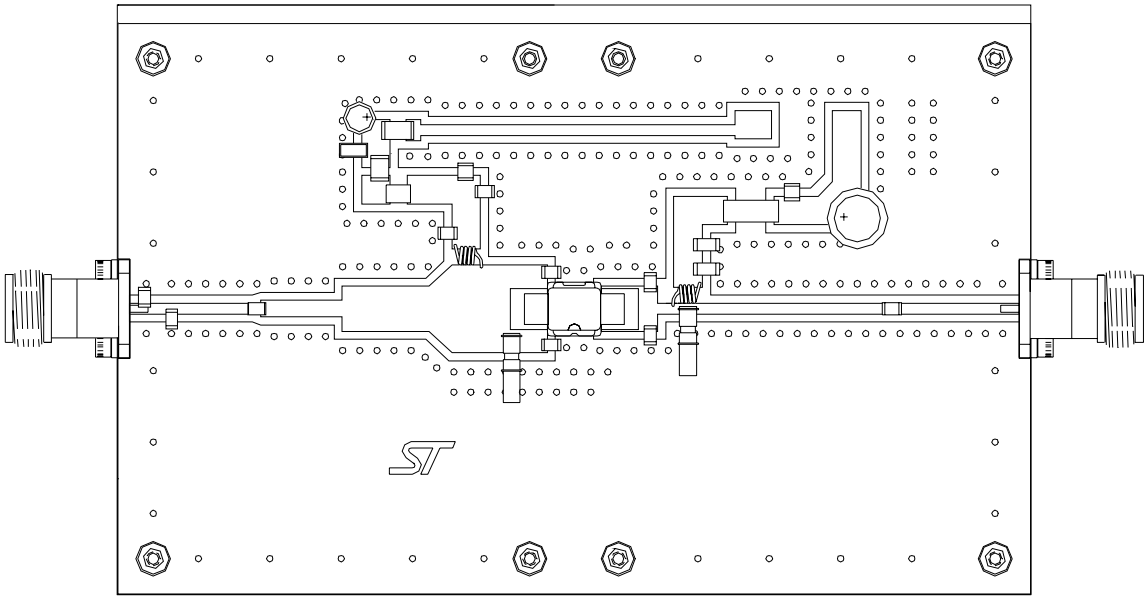

TEST CIRCUIT PHOTOMASTER

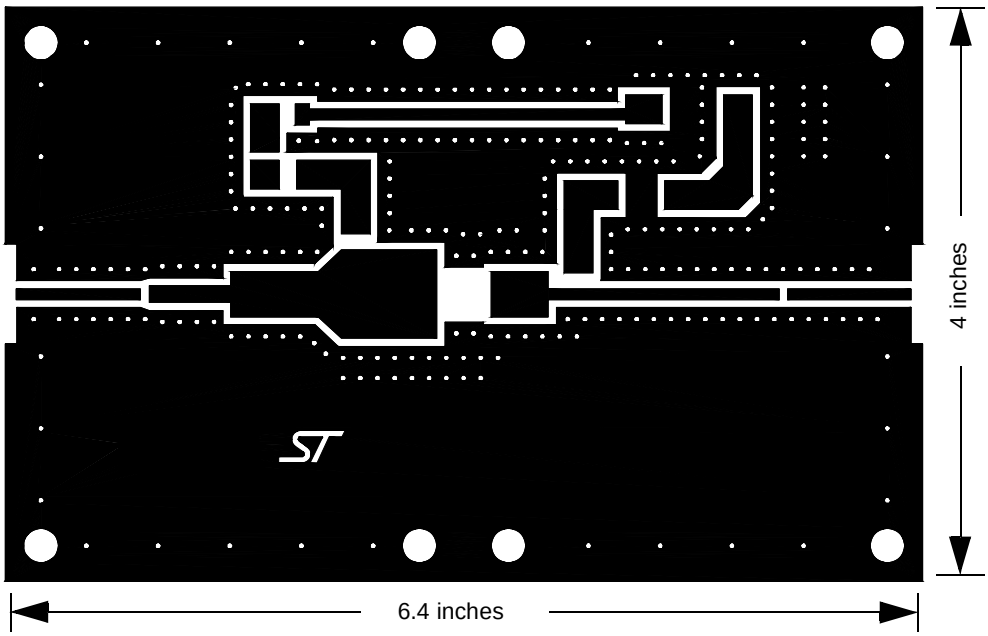

Obsolete Product

COMMON SOURCE S-PARAMETER (PD55070S)
(V_{DS} = 28V I_{DS} = 500mA)

FREQ (MHz)	$IS_{11}I$	$S_{11}\angle\Phi$	$IS_{21}I$	$S_{21}\angle\Phi$	$IS_{12}I$	$S_{12}\angle\Phi$	$IS_{22}I$	$S_{22}\angle\Phi$
50	0.834	-156	19.73	88	0.012	2	0.715	-164
100	0.868	-166	9.48	76	0.012	-9	0.741	-168
150	0.887	-170	6.18	67	0.011	-16	0.766	-169
200	0.901	-172	4.36	60	0.011	-23	0.793	-169
250	0.912	-173	3.32	52	0.009	-29	0.822	-169
300	0.924	-174	2.58	46	0.008	-29	0.848	-170
350	0.934	-175	2.07	40	0.007	-34	0.870	-171
400	0.941	-176	1.69	35	0.006	-37	0.889	-172
450	0.948	-177	1.40	31	0.005	-35	0.905	-172
500	0.954	-178	1.17	27	0.005	-38	0.916	-173
550	0.958	-179	1.00	24	0.004	-28	0.925	-174
600	0.962	-179	0.86	21	0.003	-23	0.937	-175
650	0.967	180	0.75	18	0.003	-10	0.942	-176
700	0.968	179	0.66	15	0.002	-5	0.949	-176
750	0.970	179	0.59	13	0.002	14	0.954	-177
800	0.973	178	0.52	11	0.002	32	0.960	-178
850	0.970	177	0.47	9	0.002	44	0.961	-178
900	0.977	177	0.43	7	0.002	58	0.967	-179
950	0.976	177	0.39	5	0.003	64	0.969	-180
1000	0.976	176	0.35	4	0.003	72	0.970	180
1050	0.976	175	0.32	2	0.004	70	0.974	179
1100	0.980	175	0.30	0	0.004	75	0.974	179
1150	0.978	175	0.27	-2	0.005	77	0.977	178
1200	0.975	174	0.25	-3	0.005	76	0.974	178
1250	0.977	174	0.23	-4	0.005	80	0.976	177
1300	0.979	173	0.22	-6	0.006	86	0.973	177
1350	0.975	173	0.20	-7	0.007	87	0.973	176
1400	0.976	172	0.19	-7	0.007	89	0.976	176
1450	0.977	172	0.17	-9	0.007	88	0.974	176
1500	0.974	172	0.16	-9	0.008	110	0.975	175

Obsolete

COMMON SOURCE S-PARAMETER (PD55070S)
(V_{DS} = 28V I_{DS} = 1A)

FREQ (MHz)	$IS_{11}I$	$S_{11}\angle\Phi$	$IS_{21}I$	$S_{21}\angle\Phi$	$IS_{12}I$	$S_{12}\angle\Phi$	$IS_{22}I$	$S_{22}\angle\Phi$
50	0.859	-157	19.99	90	0.009	3	0.756	-169
100	0.890	-167	9.70	79	0.009	-5	0.775	-172
150	0.906	-171	6.43	72	0.009	-10	0.788	-173
200	0.913	-173	4.61	65	0.008	-16	0.807	-173
250	0.921	-175	3.59	58	0.008	-19	0.824	-173
300	0.928	-176	2.83	52	0.007	-23	0.844	-173
350	0.933	-176	2.31	47	0.006	-23	0.862	-173
400	0.941	-177	1.92	42	0.005	-24	0.877	-173
450	0.946	-178	1.61	37	0.005	-22	0.892	-174
500	0.951	-179	1.37	33	0.004	-16	0.903	-175
550	0.956	-179	1.18	30	0.004	-10	0.913	-175
600	0.959	-180	1.02	26	0.003	-2	0.922	-176
650	0.961	180	0.90	23	0.003	3	0.929	-176
700	0.963	179	0.79	21	0.003	19	0.938	-177
750	0.966	178	0.71	18	0.003	36	0.944	-177
800	0.970	178	0.63	16	0.003	34	0.949	-178
850	0.968	177	0.57	14	0.003	49	0.953	-179
900	0.975	177	0.52	11	0.004	55	0.957	-179
950	0.972	176	0.47	9	0.004	56	0.960	-180
1000	0.972	176	0.43	8	0.004	68	0.962	180
1050	0.974	175	0.40	6	0.004	71	0.965	179
1100	0.975	175	0.37	4	0.004	76	0.967	179
1150	0.975	174	0.34	1	0.005	75	0.968	178
1200	0.971	174	0.31	0	0.005	72	0.968	178
1250	0.976	173	0.29	-2	0.006	80	0.969	177
1300	0.976	173	0.27	-3	0.006	79	0.969	177
1350	0.973	173	0.25	-4	0.007	87	0.968	176
1400	0.972	172	0.23	-5	0.007	87	0.969	176
1450	0.973	172	0.22	-6	0.007	89	0.970	175
1500	0.969	171	0.20	-7	0.008	108	0.972	175

Obsolete

COMMON SOURCE S-PARAMETER (PD55070S)
(V_{DS} = 28V I_{DS} = 2A)

FREQ (MHz)	$IS_{11}I$	$S_{11}\angle\Phi$	$IS_{21}I$	$S_{21}\angle\Phi$	$IS_{12}I$	$S_{12}\angle\Phi$	$IS_{22}I$	$S_{22}\angle\Phi$
50	0.880	-156	19.15	92	0.008	5	0.780	-172
100	0.908	-166	9.35	81	0.008	-2	0.795	-174
150	0.923	-171	6.25	74	0.008	-4	0.803	-174
200	0.928	-173	4.52	68	0.007	-13	0.817	-174
250	0.933	-175	3.55	62	0.007	-14	0.831	-174
300	0.938	-176	2.84	56	0.006	-12	0.847	-174
350	0.941	-177	2.34	51	0.005	-14	0.863	-174
400	0.945	-178	1.95	46	0.005	-13	0.876	-175
450	0.949	-178	1.66	41	0.004	-10	0.888	-175
500	0.954	-179	1.42	37	0.004	-8	0.896	-176
550	0.958	-180	1.23	33	0.003	-2	0.906	-176
600	0.961	180	1.07	30	0.003	10	0.915	-176
650	0.963	179	0.94	27	0.003	21	0.923	-177
700	0.965	178	0.84	24	0.003	27	0.930	-177
750	0.968	178	0.75	22	0.003	35	0.937	-178
800	0.968	178	0.68	19	0.003	46	0.944	-178
850	0.966	177	0.61	17	0.003	46	0.947	-179
900	0.973	176	0.56	15	0.004	63	0.953	-180
950	0.973	176	0.51	12	0.004	58	0.953	180
1000	0.972	175	0.47	10	0.004	66	0.959	180
1050	0.974	175	0.43	8	0.004	71	0.960	179
1100	0.977	175	0.40	6	0.005	73	0.963	178
1150	0.974	174	0.37	4	0.005	71	0.965	178
1200	0.970	174	0.34	3	0.005	77	0.963	178
1250	0.975	173	0.31	1	0.006	77	0.963	177
1300	0.976	173	0.29	-1	0.007	82	0.965	177
1350	0.971	173	0.27	-2	0.007	80	0.968	176
1400	0.974	172	0.25	-3	0.007	85	0.968	176
1450	0.974	172	0.24	-4	0.008	88	0.965	175
1500	0.969	171	0.22	-5	0.008	107	0.967	175

Obsolete

COMMON SOURCE S-PARAMETER (PD55070S)
(V_{DS} = 28V I_{DS} = 3A)

FREQ (MHz)	$IS_{11}I$	$S_{11}\angle\Phi$	$IS_{21}I$	$S_{21}\angle\Phi$	$IS_{12}I$	$S_{12}\angle\Phi$	$IS_{22}I$	$S_{22}\angle\Phi$
50	0.889	-154	18.31	92	0.008	8	0.783	-173
100	0.915	-166	8.98	82	0.007	-2	0.799	-174
150	0.928	-171	6.01	75	0.007	-4	0.807	-175
200	0.934	-173	4.35	69	0.007	-9	0.820	-175
250	0.939	-175	3.42	62	0.006	-12	0.833	-174
300	0.943	-176	2.74	57	0.006	-11	0.847	-174
350	0.946	-177	2.26	51	0.005	-13	0.860	-175
400	0.948	-178	1.89	47	0.005	-9	0.876	-175
450	0.954	-178	1.61	42	0.004	-6	0.887	-175
500	0.958	-179	1.37	38	0.004	-4	0.897	-176
550	0.961	-180	1.19	34	0.003	1	0.905	-176
600	0.965	180	1.05	31	0.003	12	0.914	-176
650	0.966	179	0.92	28	0.003	19	0.921	-177
700	0.968	178	0.82	25	0.003	38	0.929	-177
750	0.970	178	0.74	22	0.003	45	0.938	-178
800	0.971	177	0.66	19	0.003	45	0.942	-178
850	0.968	177	0.60	17	0.003	57	0.946	-179
900	0.973	176	0.55	15	0.004	58	0.952	-180
950	0.973	176	0.50	13	0.004	56	0.955	180
1000	0.973	175	0.46	11	0.005	59	0.958	179
1050	0.975	175	0.42	9	0.005	73	0.962	179
1100	0.977	174	0.39	6	0.005	71	0.965	178
1150	0.975	174	0.36	4	0.005	73	0.964	178
1200	0.972	174	0.33	3	0.006	74	0.963	178
1250	0.976	173	0.31	1	0.006	80	0.965	177
1300	0.977	173	0.29	-1	0.006	79	0.967	176
1350	0.974	172	0.26	-2	0.007	81	0.969	176
1400	0.976	172	0.25	-3	0.007	86	0.969	176
1450	0.974	172	0.23	-4	0.007	88	0.968	175
1500	0.971	171	0.22	-5	0.008	102	0.966	175

Obsolete P

PowerSO-10RF Straight Lead MECHANICAL DATA

DIM.	mm			Inch		
	MIN.	TYP.	MAX	MIN.	TYP.	MAX
A1	1.62	1.67	1.72	0.064	0.065	0.068
A2	3.4	3.5	3.6	0.134	0.137	0.142
A3	1.2	1.3	1.4	0.046	0.05	0.054
A4	0.15	0.2	0.25	0.005	0.007	0.009
a		0.2			0.007	
b	5.4	5.53	5.65	0.212	0.217	0.221
c	0.23	0.27	0.32	0.008	0.01	0.012
D	9.4	9.5	9.6	0.370	0.374	0.377
D1	7.4	7.5	7.6	0.290	0.295	0.298
E	15.15	15.4	15.65	0.595	0.606	0.615
E1	9.3	9.4	9.5	0.365	0.37	0.375
E2	7.3	7.4	7.5	0.286	0.292	0.294
E3	5.9	6.1	6.3	0.231	0.24	0.247
F		0.5			0.019	
G		1.2			0.047	
R1			0.25			0.01
R2		0.8			0.031	
T1		6 deg			6 deg	
T2		10 deg			10 deg	

Note (1): Resin protrusions not included (max value: 0.15 mm per side)

Obsolete Product(s)

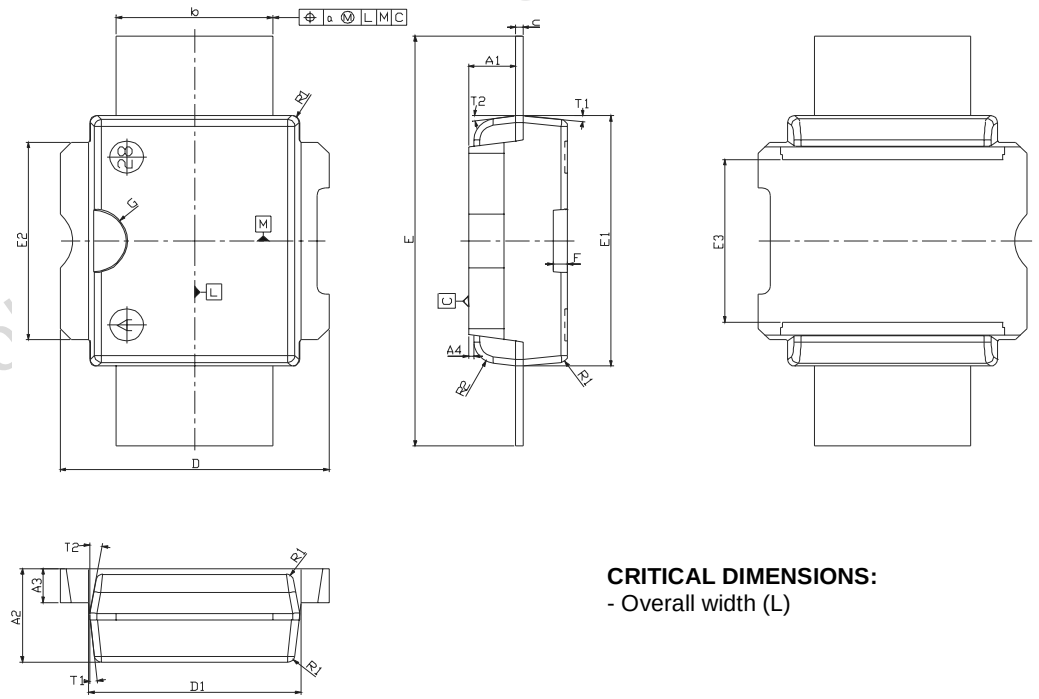

CRITICAL DIMENSIONS:
- Overall width (L)

PowerSO-10RF Formed Lead (Gull Wing) MECHANICAL DATA

DIM.	mm			Inch		
	MIN.	TYP.	MAX	MIN.	TYP.	MAX
A1	0	0.05	0.1	0.	0.0019	0.0038
A2	3.4	3.5	3.6	0.134	0.137	0.142
A3	1.2	1.3	1.4	0.046	0.05	0.054
A4	0.15	0.2	0.25	0.005	0.007	0.009
a		0.2			0.007	
b	5.4	5.53	5.65	0.212	0.217	0.221
c	0.23	0.27	0.32	0.008	0.01	0.012
D	9.4	9.5	9.6	0.370	0.374	0.377
D1	7.4	7.5	7.6	0.290	0.295	0.298
E	13.85	14.1	14.35	0.544	0.555	0.565
E1	9.3	9.4	9.5	0.365	0.37	0.375
E2	7.3	7.4	7.5	0.286	0.292	0.294
E3	5.9	6.1	6.3	0.231	0.24	0.247
F		0.5			0.019	
G		1.2			0.047	
L	0.8	1	1.1	0.030	0.039	0.042
R1			0.25			0.01
R2		0.8			0.031	
T	2 deg	5 deg	8 deg	2 deg	5 deg	8 deg
T1		6 deg			6 deg	
T2		10 deg			10 deg	

Note (1): Resin protrusions not included (max value: 0.15 mm per side)

Obsolete Product(s)

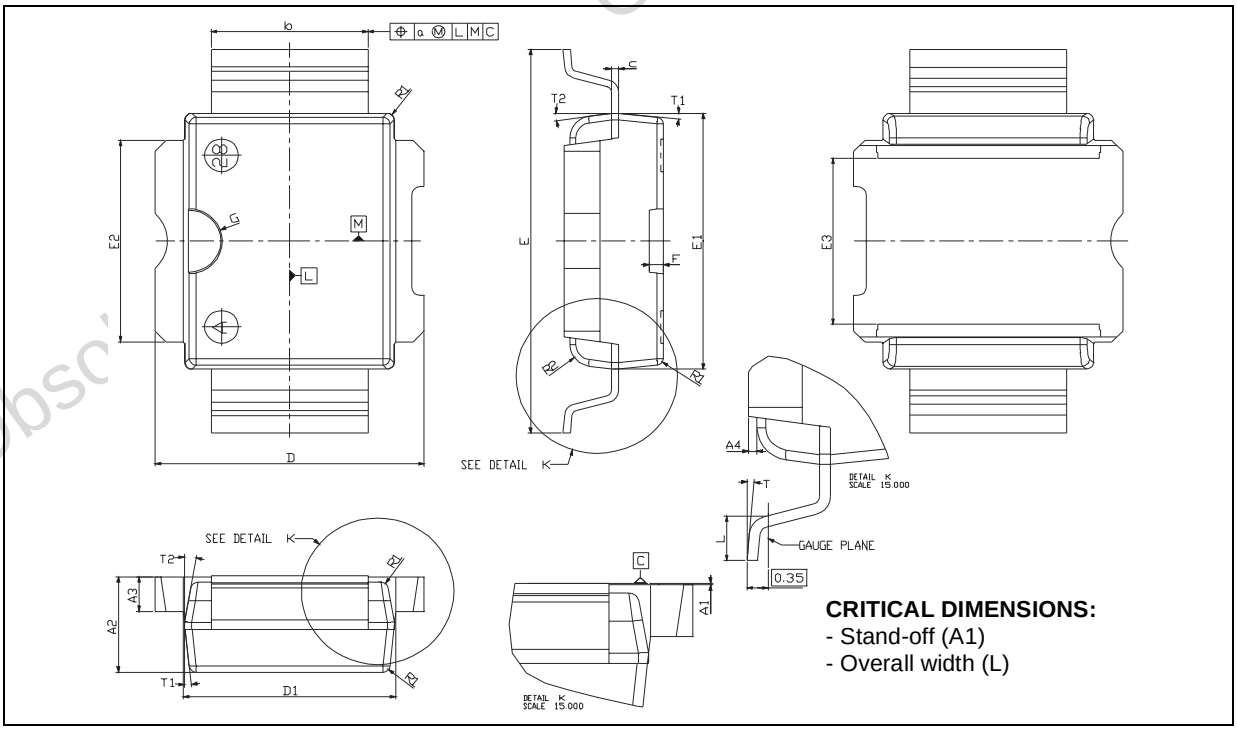

Obsolete Product(s) - Obsolete Product(s)

Information furnished is believed to be accurate and reliable. However, STMicroelectronics assumes no responsibility for the consequences of use of such information nor for any infringement of patents or other rights of third parties which may result from its use. No license is granted by implication or otherwise under any patent or patent rights of STMicroelectronics. Specifications mentioned in this publication are subject to change without notice. This publication supersedes and replaces all information previously supplied. STMicroelectronics products are not authorized for use as critical components in life support devices or systems without express written approval of STMicroelectronics.

The ST logo is registered trademark of STMicroelectronics
® 2003 STMicroelectronics - All Rights Reserved

All other names are the property of their respective owners.

Australia - Brazil - Canada - China - Finland - France - Germany - Hong Kong - India - Israel - Italy - Japan -
Malaysia - Malta - Morocco - Singapore - Spain - Sweden - Switzerland - United Kingdom - U.S.A.
http://www.st.com