NOTES:

1. MATERIALS AND FINISHES:
   BODY, COUPLING NUT, WASHER
   SHELL & RETAINING RING AT BNC SIDE - BRASS, NICKEL PLATING
   RETAINING RING AT TYPE N SIDE - SUS 304, NATURAL
   SPRING - BeCu, NICKEL PLATING
   CONTACT - PHOSPHOR BRONZE, GOLD PLATING
   INSULATOR - PTFE, NATURAL

2. ELECTRICAL:
   A. IMPEDANCE: 75 OHM
   B. FREQUENCY RANGE: DC - 12 GHz
   C. VSWR(RETURN LOSS): -20 dB MIN @ DC - 6 GHz
      -15 dB MIN @ 6 - 12 GHz
   D. DIELECTRIC WITHSTANDING VOLTAGE: 500 VRMS, MIN.

3. MECHANICAL:
   A. DURABILITY: 500 CYCLES MIN.
   B. TEMPERATURE RANGE: -40°C TO +85°C

4. PACKAGING:
   A. QUANTITY: SINGLE PACK
   B. MARKING: PACKAGING TO BE MARKED
      "AMPHENOL RF, AD-NPBNCP-1 & DATE CODE"

5. INTENDED FOR USE IN A CONTROLLED ENVIRONMENT (LAB) ONLY
   HIGH SIDE LOADS MAY RESULT IN DEGRADED RF PERFORMANCE

REVISIONS				
REV	DESCRIPTION	DATE	ECN	APPR
A	RELEASE TO MFG.	17-Jun-20	15224	SH

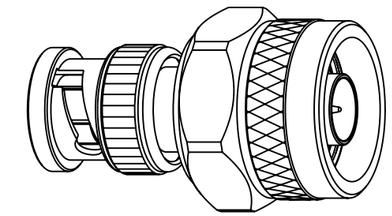

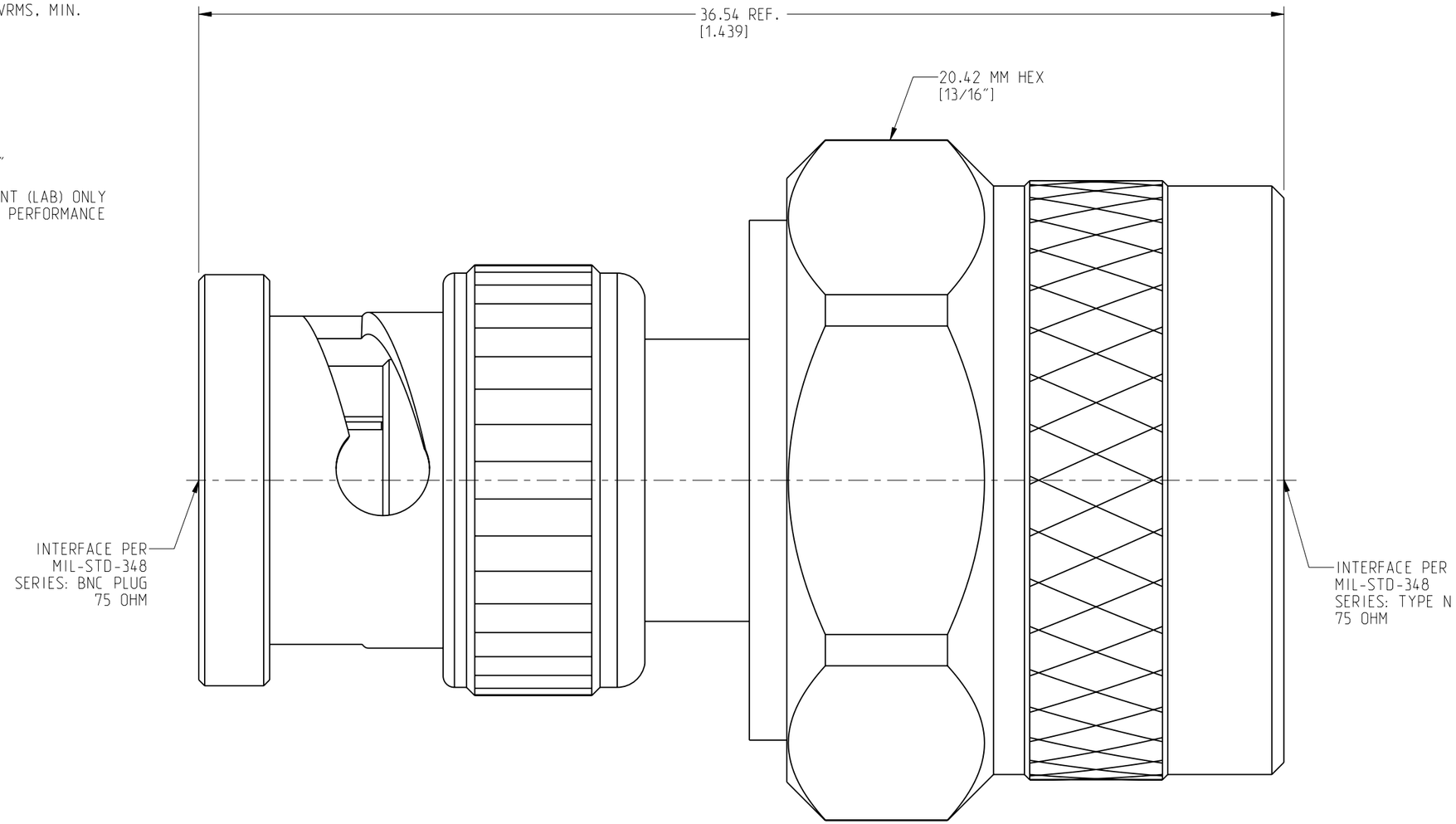

CUSTOMER OUTLINE DRAWING

ALL OTHER SHEETS ARE FOR INTERNAL USE ONLY

NOTICE: These drawings, specifications, or other data (1) are, and remain the property of Amphenol corp. (2) must be returned upon request; and (3) are confidential and not to be disclosed to any person other than those to whom they are given by Amphenol Corp. The furnishing of these drawings, specifications, or other data by Amphenol Corp., or to any other person to anyone for any purpose is not to be regarded by implication or otherwise in any manner licensing, granting rights to permitting such holder or any other person to manufacture, use or sell any product, process or design, patented or otherwise, that may in any way be related to or disclosed by said drawings, specifications, or other data.

THIRD ANGLE PROJ.

REFERENCE	EAR#
--	9420

UNLESS OTHERWISE SPECIFIED
DIMENSIONS ARE METRIC [INCHES] AND TOLERANCES ARE:

<0.5mm = ±0.05mm	[<0.020 = ±0.002]
>0.5 - 6mm = ±0.1mm	[>0.020 - 0.236 = ±0.004]
>6.00 - 30mm = ±0.2mm	[>0.236 - 1.181 = ±0.008]
>30.00 - 120mm = ±0.3mm	[>1.181 - 4.725 = ±0.012]

ANGLES = ±1°

MATERIAL: SEE NOTES

ENGINEER: M.ZHANG

DATE: 12-Jun-20

TITLE: TYPE N PLUG TO BNC PLUG TEST ADAPTER 75 OHM

SHEET NO. 2 OF 2

SCALE: 6.0:1.0

Amphenol RF

SIZE		REV
B	DRAWING NO. AD-NPBNCP-1	A
	ITEM NO. AD-NPBNCP-1	
	PART NO. AD-NPBNCP-1	