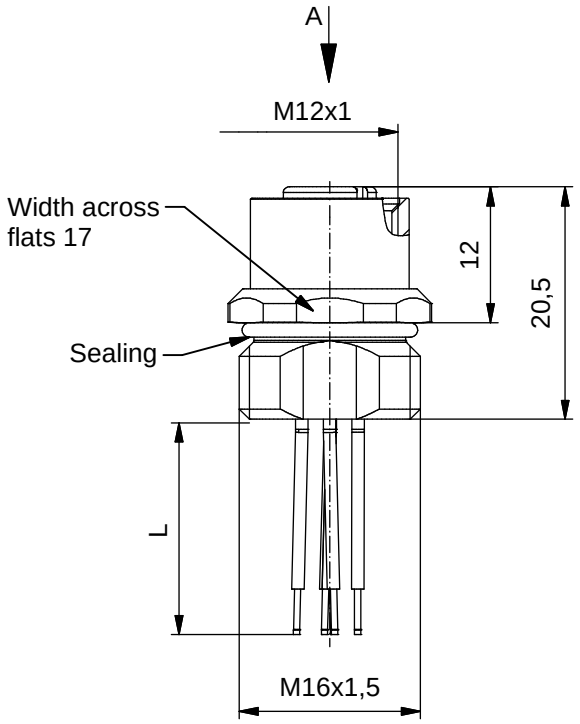

Technical specification:

Rated voltage: IEC 61076-2-101	4pos 250 V	5pos 60 V	8pos 30 V
Current rating: IEC 61076-2-101	4/5pos 4 A at 40℃	8pos 2 A at 40℃	
Insulation resistance: IEC 60512	>=100 MΩ		
Pollution degree: IEC 60664-1	3/2		
Degree of protection: IEC 60529	IP 69K, in mated condition		
Temperature range: EN 60512-11-10 EN 60512-11-4	-30℃ ... +105℃ -40℃ -40℃ ... +85℃		
Mating cycles: IEC 60512-9a	>=100		

Wire specification:

Temperatur range	
static	-30℃ ... +80℃
flexibel	-10℃ ... +80℃

Materials:

Contact:	CuZn, Ni b / Au 0,2 gal.
Contact carrier:	PP GF, UL 94 HB
Sealing:	FPM
Socket housing:	1.4404, stainless steel
Grouting:	Polyurethane-resin, UL 94

Installation specification:

Recommended torque:	1-1,2 Nm
Conec installation tool:	Torque wrench: 36-000200 Insert across flats 17: 36-000230

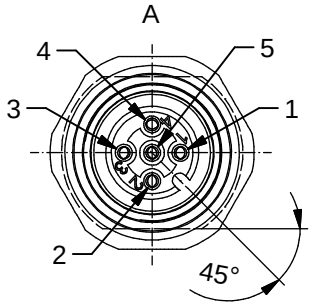

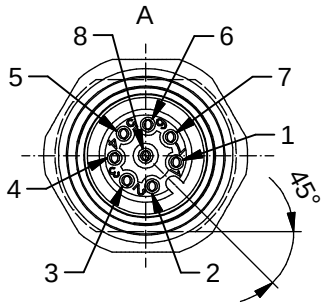

Contact assignment:

1) brown
2) white
3) blue
4) black
5) green-yellow

Contact assignment:

1) white
2) brown
3) green
4) yellow
5) grey
6) pink
7) blue
8) red

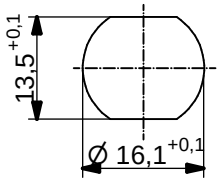

Minimum wall thickness 1,5mm, alternativ panel cut-out d=16,1

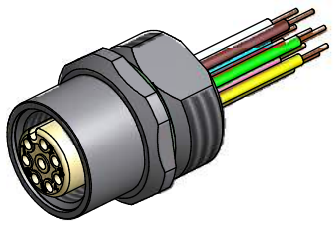

Part no:	Description:	Pos	Length L:	Wire:
43-01018	SAL - FB - 12 - FK4 - 0,5	4	0,5m	AWG 24 PVC, UL
43-xxxxx	SAL - FB - 12 - FK4 - ...	4	x	
43-01019	SAL - FB - 12 - FK5 - 0,5	5	0,5m	
43-xxxxx	SAL - FB - 12 - FK5 - ...	5	x	
43-02823	SAL - FB - 12 - FK8 - 0,5	8	0,5m	
43-xxxxx	SAL - FB - 12 - FK8 - ...	8	x	

DO NOT ALTER CAD DRAWING BY HAND

RoHS & REACH compliant

Index c: 26.01.16 rch Ä5944
Data sheet revised, article 8pos added

tolerance of wire: L <= 0,5m: L + 20mm; L > 0,5m: L + 4%

general tolerance: 0 ± 0,50mm; 0,0 ± 0,25mm; 0,00 ± 0,10mm; ∡ ± 1,5°

THIS DRAWING MAY NOT BE COPIED OR REPRODUCED IN ANY WAY, AND MAY NOT BE PASSED ON TO A THIRD PARTY WITHOUT WRITTEN PERMISSION. OWNERSHIP AND COPYRIGHT OF CONEC GmbH

dim. in mm

	date	name
drawn	20.02.07	Fromm
appd.	06.03.07	Mankopf

title: Female socket M12x1 with wire, frontmounting, FB

dwg no: 43K1A290

part no: